Bicycle Owner's Manual

10th Edition, 2014

This manual meets 16 CFR 1512 and EN 14764, 14766 and 14781 Standards

IMPORTANT:

This manual contains important safety, performance and service information. Read it before you take the first ride on your new bicycle, and keep it for reference.

Additional safety, performance and service information for specific components such as suspension or pedals on your bicycle, or for accessories such as helmets or lights that you purchase, may also be available. Make sure that your dealer has given you all the manufacturers' literature that was included with your bicycle or accessories. In case of a conflict between the instructions in this manual and information provided by a component manufacturer, always follow the component manufacturer's instructions.

If you have any questions or do not understand something, take responsibility for your safety and consult with your dealer or the bicycle's manufacturer.

NOTE:

This manual is not intended as a comprehensive use, service, repair or maintenance manual. Please see your dealer for all service, repairs or maintenance. Your dealer may also be able to refer you to classes, clinics or books on bicycle use, service, repair or maintenance.

Contents

GENERAL WARNING p. 1
A special note to parents p. 2

1. First
   A. Bike fit p. 3
   B. Safety first p. 3
   C. Mechanical Safety Check p. 3
   D. First ride p. 5
2. Safety
   A. The Basics p. 6
   B. Riding Safety p. 7
   C. Off Road Safety p. 8
   D. Wet Weather Riding p. 8
   E. Night Riding p. 9
   F. Extreme, stunt or competition riding p. 10
   G. Changing Components or Adding Accessories p. 11
3.Fit
   A. Standover height p. 11
   B. Saddle position p. 12
   C. Handlebar height and angle p. 14
   D. Control position adjustments p. 15
   E. Brake reach p. 15
4. Tech
   A. Wheels p. 16
   1. secondary retention devices p. 18
   2. Wheels with cam action systems p. 18
   3. Removing and installing wheels p. 19
   B. Seat post cam action clamp p. 22
   C. Brakes p. 23
   D. Shifting gears p. 25
   E. Pedals p. 28
   F. Bicycle Suspension p. 29
   G. Tires and Tubes p. 30
5. Service
   A. Service Intervals p. 32
   B. If your bicycle sustains an impact p. 34

Appendix A: Intended Use p. 35
Appendix B: Lifespan of your bike and its components p. 41
Appendix C: Coaster Brakes p. 49
Appendix D: Fastener Torque Specifications p. 51

GENERAL WARNING:

Like any sport, bicycling involves risk of injury and damage. By choosing to ride a bicycle, you assume the responsibility for that risk, so you need to know — and to practice — the rules of safe and responsible riding and of proper use and maintenance. Proper use and maintenance of your bicycle reduces risk of injury.

This Manual contains many “Warnings” and “Cautions” concerning the consequences of failure to maintain or inspect your bicycle and of failure to follow safe cycling practices.

•The combination of the ⚠ safety alert symbol and the word **WARNING** indicates a potentially hazardous situation which, if not avoided, could result in serious injury or death.

•The combination of the ⚠ safety alert symbol and the word **CAUTION** indicates a potentially hazardous situation which, if not avoided, may result in minor or moderate injury, or is an alert against unsafe practices.

•The word **CAUTION** used without the safety alert symbol indicates a situation which, if not avoided, could result in serious damage to the bicycle or the voiding of your warranty.

Many of the Warnings and Cautions say “you may lose control and fall”. Because any fall can result in serious injury or even death, we do not always repeat the warning of possible injury or death.

Because it is impossible to anticipate every situation or condition which can occur while riding, this Manual makes no representation about the safe use of the bicycle under all conditions. There are risks associated with the use of any bicycle which cannot be predicted or avoided, and which are the sole responsibility of the rider.

A special note for parents:

WARNING: This manal does not cover Juvenile or BMX bicycles.

As a parent or guardian, you are responsible for the activities and safety of your minor child, and that includes making sure that the bicycle is properly fitted to the child; that it is in good repair and safe operating condition; that you and your child have learned and understand the safe operation of the bicycle; and that you and your child have learned, understand and obey not only the applicable local motor vehicle, bicycle and traffic laws, but also the common sense rules of safe and responsible bicycling. As a parent, you should read this manual, as well as review its warnings and the bicycle's functions and operating procedures with your child, before letting your child ride the bicycle.

WARNING: Make sure that your child always wears an approved bicycle helmet when riding; but also make sure that your child understands that a bicycle helmet is for bicycling only, and must be removed when not riding. A helmet must not be worn while playing, in play areas, on playground equipment, while climbing trees, or at any time while not riding a bicycle. Failure to follow this warning could result in serious injury or death.

1. First

NOTE: We strongly urge you to read this Manual in its entirety before your first ride. At the very least, read and make sure that you understand each point in this section, and refer to the cited sections on any issue which you don't completely understand. Please note that not all bicycles have all of the features described in this Manual. Ask your dealer to point out the features of your bicycle.

A. Bike fit

1. Is your bike the right size? To check, see Section 3.A. If your bicycle is too large or too small for you, you may lose control and fall. If your new bike is not the right size, ask your dealer to exchange it before you ride it.
2. Is the saddle at the right height? To check, see Section 3.B. If you adjust your saddle height, follow the Minimum Insertion instructions in Section 3.B.
3. Are saddle and seat post securely clamped? A correctly tightened saddle will allow no saddle movement in any direction. See Section 3.B.
4. Are the stem and handlebars at the right height for you? If not, see Section 3.C.
5. Can you comfortably operate the brakes? If not, you may be able to adjust their angle and reach. See Section 3.D and 3.E.
6. Do you fully understand how to operate your new bicycle? If not, before your first ride, have your dealer explain any functions or features which you do not understand.

B.Safety first

1. Always wear an approved helmet when riding your bike, and follow the helmet manufacturer's instructions for fit, use and care.
2. Do you have all the other required and recommended safety equipment? See Section 2. It's your responsibility to familiarize yourself with the laws of the areas where you ride, and to comply with all applicable laws.
3. Do you know how to correctly secure your front and rear wheels? Check Section 4.A.1 to make sure. Riding with an improperly secured wheel can cause the wheel to wobble or disengage from the bicycle, and cause serious injury or death.
4. If your bike has toeclips and straps or clipless ("step-in") pedals, make sure you know how they work (see Section 4.E). These pedals require special techniques and skills. Follow the pedal manufacturer's instructions for use, adjustment and care.
5. Do you have "toe overlap"? On smaller framed bicycles your toe or toeclip may be able to contact the front wheel when a pedal is all the way forward and the wheel is turned. Read Section 4.E. to check whether you have toeclip overlap.
6. Does your bike have suspension? If so, check Section 4.F. Suspension can change the way a bicycle performs. Follow the suspension manufacturer's instructions for use, adjustment and care.

C. Mechanical Safety Check

Routinely check the condition of your bicycle before every ride.

- **Nuts, bolts screws & other fasteners:** Because manufacturers use

a wide variety of fastener sizes and shapes made in a variety of materials, often differing by model and component, the correct tightening force or torque cannot be generalized. To make sure that the many fasteners on your bicycle are correctly tightened, refer to the Fastener Torque Specifications in Appendix D of this manual or to the torque specifications in the instructions provided by the manufacturer of the component in question. Correctly tightening a fastener requires a calibrated torque wrench. A professional bicycle mechanic with a torque wrench should torque the fasteners on you bicycle. If you choose to work on your own bicycle, you must use a torque wrench and the correct tightening torque specifications from the bicycle or component manufacturer or from your dealer. If you need to make an adjustment at home or in the field, we urge you to exercise care, and to have the fasteners you worked on checked by your dealer as soon as possible. *Note that there are some components which require special tools and knowledge. In Sections 3 and 4 we discuss the items which you may be able to adjust yourself. All other adjustments and repairs should be done by a qualified bicycle mechanic.*

WARNING: Correct tightening force on fasteners –nuts, bolts, screws– on your bicycle is important. Too little force, and the fastener may not hold securely. Too much force, and the fastener can strip threads, stretch, deform or break. Either way, incorrect tightening force can result in component failure, which can cause you to loose control and fall.

 Make sure nothing is loose. Lift the front wheel off the ground by two or three inches, then let it bounce on the ground. Anything sound, feel or look loose? Do a visual and tactile inspection of the whole bike. Any loose parts or accessories? If so, secure them. If you're not sure, ask someone with experience to check.

 Tires & Wheels: Make sure tires are correctly inflated (see Section 4.G.1). Check by putting one hand on the saddle, one on the intersection of the handlebars and stem, then bouncing your weight on the bike while looking at tire deflection. Compare what you see with how it looks when you know the tires are correctly inflated; and adjust if necessary.

 Tires in good shape? Spin each wheel slowly and look for cuts in the tread and sidewall. Replace damaged tires before riding the bike.

 Wheels true? Spin each wheel and check for brake clearance and side-to-side wobble. If a wheel wobbles side to side even slightly, or rubs against or hits the brake pads, take the bike to a qualified bike shop to have the wheel trued.

CAUTION: Wheels must be true for rim brakes to work effectively. Wheel trueing is a skill which requires special tools and experience. Do not attempt to true a wheel unless you have the knowledge, experience and tools needed to do the job correctly.

 Wheel rims clean and undamaged? Make sure the rims are clean and undamaged at the tire bead and, if you have rim brakes, along the braking surface. Check to make sure that any rim wear indicator marking is not visible at any point on the wheel rim.

WARNING: Bicycle wheel rims are subject to wear. Ask your dealer about wheel rim wear. Some wheel rims have a rim wear indicator which becomes visible as the rim's braking surface wears. A visible rim wear indicator on the side of the wheel rim is an indication that the wheel rim has reached its maximum usable life. Riding a wheel that is at the end of its usable life can result in wheel failure, which can cause you to loose control and fall.

 Brakes: Check the brakes for proper operation (see Sections 4.C). Squeeze the brake levers. Are the brake quick-releases closed? All control cables seated and securely engaged? If you have rim brakes, do the brake pads contact the wheel rim squarely and make full contact with the rim? Do the brakes begin to engage within an inch of brake lever movement? Can you apply full braking force at the levers without having them touch the handlebar? If not, your brakes need adjustment. Do not ride the bike until the brakes are properly adjusted by a professional bicycle mechanic.

 Wheel retention system: Make sure the front and rear wheels are correctly secured. See Section 4.A

 Seat post: If your seat post has an over-center cam action fastener for easy height adjustment, check that it is properly adjusted and in the locked position. See Section 4.B.

 Handlebar and saddle alignment: Make sure the saddle and handlebar stem are parallel to the bike's center line and clamped tight enough so that you can't twist them out of alignment. See Sections 3.B and 3.C.

 Handlebar ends: Make sure the handlebar grips are secure and in good condition, with no cuts, tears, or worn out areas. If not, have your dealer replace them. Make sure the handlebar ends and extensions are plugged. If not, have your dealer plug them before you ride. If the handlebars have bar end extensions, make sure they are clamped tight enough so you can't twist them.

WARNING: Loose or damaged handlebar grips or extensions can cause you to lose control and fall. Unplugged handlebars or extensions can cut you and cause serious injury in an otherwise minor accident.

VERY IMPORTANT SAFETY NOTE:

Please also read and become thoroughly familiar with the important information on the lifespan of your bicycle and its components in Appendix B on Page 43.

D. First ride

When you buckle on your helmet and go for your first familiarization ride on your new bicycle, be sure to pick a controlled environment, away from cars, other cyclists, obstacles or other hazards. Ride to become familiar with the controls, features and performance of your new bike.

Familiarize yourself with the braking action of the bike (see Section 4.C). Test the brakes at slow speed, putting your weight toward the rear and gently applying the brakes, rear brake first. Sudden or excessive application of the front brake could pitch you over the handlebars. Applying brakes too hard can lock up a

wheel, which could cause you to lose control and fall. Skidding is an example of what can happen when a wheel locks up.

If your bicycle has toeclips or clipless pedals, practice getting in and out of the pedals. See paragraph B.4 above and Section 4.E.4.

If your bike has suspension, familiarize yourself with how the suspension responds to brake application and rider weight shifts. See paragraph B.6 above and Section 4.F.

Practice shifting the gears (see Section 4.D). Remember to never move the shifter while pedaling backward, nor pedal backwards immediately after having moved the shifter. This could jam the chain and cause serious damage to the bicycle.

Check out the handling and response of the bike; and check the comfort.

If you have any questions, or if you feel anything about the bike is not as it should be, consult your dealer before you ride again.

2. Safety

A. The Basics

WARNING: The area in which you ride may require specific safety devices. It is your responsibility to familiarize yourself with the laws of the area where you ride and to comply with all applicable laws, including properly equipping yourself and your bike as the law requires.

Observe all local bicycle laws and regulations. Observe regulations about bicycle lighting, licensing of bicycles, riding on sidewalks, laws regulating bike path and trail use, helmet laws, child carrier laws, special bicycle traffic laws. It's your responsibility to know and obey the laws.

1. Always wear a cycling helmet which meets the latest certification standards and is appropriate for the type of riding you do. Always follow the helmet manufacturer's instructions for fit, use and care of your helmet. Most serious bicycle injuries involve head injuries which might have been avoided if the rider had worn an appropriate helmet.

WARNING: Failure to wear a helmet when riding may result in serious injury or death.

2. Always do the Mechanical Safety Check (Section 1.C) before you get on a bike.

3. Be thoroughly familiar with the controls of your bicycle: brakes (Section 4.C.); pedals (Section 4.E.); shifting (Section 4.D.)

4. Be careful to keep body parts and other objects away from the sharp teeth of chainrings, the moving chain, the turning pedals and cranks, and the spinning wheels of your bicycle.

5. Always wear:

- Shoes that will stay on your feet and will grip the pedals. Make sure that

shoe laces cannot get into moving parts, and never ride barefoot or in sandals.

• Bright, visible clothing that is not so loose that it can be tangled in the bicycle or snagged by objects at the side of the road or trail.

• Protective eyewear, to protect against airborne dirt, dust and bugs — tinted when the sun is bright, clear when it's not.

6. Unless your bicycle was specifically designed for jumping (See Appendix A, Intended Use) don't jump with your bike. Jumping a bike, particularly a BMX or mountain bike, can be fun; but it can put huge and unpredictable stress on the bicycle and its components. Riders who insist on jumping their bikes risk serious damage, to their bicycles as well as to themselves. Before you attempt to jump, do stunt riding or race with your bike, read and understand Section 2.F.

7. Ride at a speed appropriate for conditions. Higher speed means higher risk.

B. Riding Safety

1. Obey all Rules of the Road and all local traffic laws.

2. You are sharing the road or the path with others — motorists, pedestrians and other cyclists. Respect their rights.

3. Ride defensively. Always assume that others do not see you.

4. Look ahead, and be ready to avoid:

• Vehicles slowing or turning, entering the road or your lane ahead of you, or coming up behind you.

• Parked car doors opening.

• Pedestrians stepping out.

• Children or pets playing near the road.

• Pot holes, sewer grating, railroad tracks, expansion joints, road or sidewalk construction, debris and other obstructions that could cause you to swerve into traffic, catch your wheel or cause you to have an accident.

• The many other hazards and distractions which can occur on a bicycle ride.

5. Ride in designated bike lanes, on designated bike paths or as close to the edge of the road as possible, in the direction of traffic flow or as directed by local governing laws.

6. Stop at stop signs and traffic lights; slow down and look both ways at street intersections. Remember that a bicycle always loses in a collision with a motor vehicle, so be prepared to yield even if you have the right of way.

7. Use approved hand signals for turning and stopping.

8. Never ride with headphones. They mask traffic sounds and emergency vehicle sirens, distract you from concentrating on what's going on around you, and their wires can tangle in the moving parts of the bicycle, causing you to lose control.

9. Never carry a passenger; and, before installing a child carrier or trailer, check with your dealer or the bicycle manufacturer to make sure the bicycle is designed for it. If the bicycle is suitable for a child carrier or trailer, make sure that the carrier or trailer is correctly mounted and the child is secured and wearing an approved helmet.

10. Never carry anything which obstructs your vision or your complete control of the bicycle, or which could become entangled in the moving parts of the bicycle.

11. Never hitch a ride by holding on to another vehicle.

12. Don't do stunts, wheelies or jumps. If you intend to do stunts, wheelies, jumps or go racing with your bike despite our advice not to, read Section 2.F, *Downhill, Stunt or Competition Biking*, **now**. Think carefully about your skills before deciding to take the large risks that go with this kind of riding.

13. Don't weave through traffic or make any moves that may surprise people with whom you are sharing the road.

14. Observe and yield the right of way.

15. Never ride your bicycle while under the influence of alcohol or drugs.

16. If possible, avoid riding in bad weather, when visibility is obscured, at dawn, dusk or in the dark, or when extremely tired. Each of these conditions increases the risk of accident.

C. Off Road Safety

We recommend that children not ride on rough terrain unless they are accompanied by an adult.

1. The variable conditions and hazards of off-road riding require close attention and specific skills. Start slowly on easier terrain and build up your skills. If your bike has suspension, the increased speed you may develop also increases your risk of losing control and falling. Get to know how to handle your bike safely before trying increased speed or more difficult terrain.

2. Wear safety gear appropriate to the kind of riding you plan to do.

3. Don't ride alone in remote areas. Even when riding with others, make sure that someone knows where you're going and when you expect to be back.

4. Always take along some kind of identification, so that people know who you are in case of an accident; and take along some cash for food, a cool drink or an emergency phone call.

5. Yield right of way to pedestrians and animals. Ride in a way that does not frighten or endanger them, and give them enough room so that their unexpected moves don't endanger you.

6. Be prepared. If something goes wrong while you're riding off-road, help may not be close.

7. Before you attempt to jump, do stunt riding or race with your bike, read and understand Section 2.F.

Off Road respect

Obey the local laws regulating where and how you can ride off-road, and respect private property. You may be sharing the trail with others — hikers, equestrians, other cyclists. Respect their rights. Stay on the designated trail. Don't contribute to erosion by riding in mud or with unnecessary sliding. Don't disturb the ecosystem by cutting your own trail or shortcut through vegetation or streams. It is your responsibility to minimize your impact on the environment. Leave things as you found them; and always take out everything you brought in.

D. Wet Weather Riding

⚠ **WARNING: Wet weather impairs traction, braking and visibility, both for the bicyclist and for other vehicles sharing the road. The risk of an accident is dramatically increased in wet conditions.**

Under wet conditions, the stopping power of your brakes (as well as the brakes of other vehicles sharing the road) is dramatically reduced and your tires don't grip nearly as well. This makes it harder to control speed and easier to lose control. To make sure that you can slow down and stop safely in wet conditions, ride more slowly and apply your brakes earlier and more gradually than you would under normal, dry conditions. See also Section 4.C.

E. Night Riding

Riding a bicycle at night is *much* more dangerous than riding during the day. A bicyclist is very difficult for motorists and pedestrians to see. Therefore, children should never ride at dawn, at dusk or at night. Adults who chose to accept the greatly increased risk of riding at dawn, at dusk or at night need to take extra care both riding and choosing specialized equipment which helps reduce that risk. Consult your dealer about night riding safety equipment.

WARNING: Reflectors are not a substitute for required lights. Riding at dawn, at dusk, at night or at other times of poor visibility without an adequate bicycle lighting system and without reflectors is dangerous and may result in serious injury or death.

Bicycle reflectors are designed to pick up and reflect car lights and street lights in a way that may help you to be seen and recognized as a moving bicyclist.

CAUTION: Check reflectors and their mounting brackets regularly to make sure that they are clean, straight, unbroken and securely mounted. Have your dealer replace damaged reflectors and straighten or tighten any that are bent or loose.

The mounting brackets of front and rear reflectors are often designed as brake straddle cable safety catches which prevent the straddle cable from catching on the tire tread if the cable jumps out of its yoke or breaks.

WARNING: Do not remove the front or rear reflectors or reflector brackets from your bicycle. They are an integral part of the bicycle's safety system.

Removing the reflectors reduces your visibility to others using the roadway. Being struck by other vehicles may result in serious injury or death.

The reflector brackets may protect you from a brake straddle cable catching on the tire in the event of brake cable failure. If a brake straddle cable catches on the tire, it can cause the wheel to stop suddenly, causing you to loose control and fall.

If you choose to ride under conditions of poor visibility, check and be sure you comply with all local laws about night riding, and take the following strongly recommended additional precautions:

• Purchase and install battery or generator powered head and tail lights which meet all regulatory requirements for where you live and provide adequate visibility.

• Wear light colored, reflective clothing and accessories, such as a reflective vest, reflective arm and leg bands, reflective stripes on your helmet, flashing lights attached to your body and/or your bicycle ... any reflective device or light source that moves will help you get the attention of approaching motorists, pedestrians and other traffic.

• Make sure your clothing or anything you may be carrying on the bicycle does not obstruct a reflector or light.

• Make sure that your bicycle is equipped with correctly positioned and securely mounted reflectors.

While riding at dawn, at dusk or at night:

• Ride slowly.

• Avoid dark areas and areas of heavy or fast-moving traffic.

• Avoid road hazards.

• If possible, ride on familiar routes.

If riding in traffic:

• Be predictable. Ride so that drivers can see you and predict your movements.

• Be alert. Ride defensively and expect the unexpected.

• If you plan to ride in traffic often, ask your dealer about traffic safety classes or a good book on bicycle traffic safety.

F. Extreme, stunt or competition riding

Whether you call it *Aggro, Hucking, Freeride, North Shore, Downhill, Jumping, Stunt Riding, Racing* or something else: if you engage in this sort of extreme, aggressive riding *you **will** get hurt,* and you voluntarily assume a greatly increased risk of injury or death.

Not all bicycles are designed for these types of riding, and those that are may not be suitable for all types of aggressive riding. Check with your dealer or the bicycle's manufacturer about the suitability of your bicycle before engaging in extreme riding.

When riding fast down hill, you can reach speeds achieved by motorcycles, and therefore face similar hazards and risks. Have your bicycle and equipment carefully inspected by a qualified mechanic and be sure it is in perfect condition. Consult with expert riders, area site personnel and race officials on conditions and equipment advisable at the site where you plan to ride. Wear appropriate safety gear, including an approved full face helmet, full finger gloves, and body armor. Ultimately, it is your responsibility to have proper equipment and to be familiar with course conditions.

WARNING: Although many catalogs, advertisements and articles about bicycling depict riders engaged in extreme riding, this activity is extremely dangerous, increases your risk of injury or death, and increases the severity of any injury. Remember that the action depicted is being performed by professionals with many years of training and experience. Know your limits and always wear a helmet and other appropriate safety gear. Even with state-of-the-art protective safety gear, you could be seriously injured or killed when jumping, stunt riding, riding downhill at speed or in competition.

WARNING: Bicycles and bicycle parts have limitations with regard to strength and integrity, and this type of riding can exceed those limitations or dramatically reduce the length of their safe use.

We recommend against this type of riding because of the increased risks; but if you choose to take the risk, at least:

- Take lessons from a competent instructor first
- Start with easy learning exercises and slowly develop your skills before trying more difficult or dangerous riding
- Use only designated areas for stunts, jumping, racing or fast downhill riding
- Wear a full face helmet, safety pads and other safety gear
- Understand and recognize that the stresses imposed on your bike by this kind of activity may break or damage parts of the bicycle and void the warranty
- Take your bicycle to your dealer if anything breaks or bends. Do not ride your bicycle when any part is damaged.

If you ride downhill at speed, do stunt riding or ride in competition, know the limits of your skill and experience. Ultimately, avoiding injury is your responsibility.

G. `Changing Components or Adding Accessories

There are many components and accessories available to enhance the comfort, performance and appearance of your bicycle. However, if you change components or add accessories, you do so at your own risk. The bicycle's manufacturer may not have tested that component or accessory for compatibility, reliability or safety on your bicycle. Before installing any component or accessory, including a different size tire, make sure that it is compatible with your bicycle by checking with your dealer. Be sure to read, understand and follow the instructions that accompany the products you purchase for your bicycle. *See also Appendix A, p. 35 and B, p. 41.*

WARNING: Failure to confirm compatibility, properly install, operate and maintain any component or accessory can result in serious injury or death.

WARNING: Changing the components on your bike with other than genuine replacement parts may compromise the safety of your bicycle and may void the warranty. Check with your dealer before changing the components on your bike.

3. Fit

NOTE: Correct fit is an essential element of bicycling safety, performance and comfort. Making the adjustments to your bicycle which result in correct fit for your body and riding conditions requires experience, skill and special tools. Always have your dealer make the adjustments on your bicycle; or, if you have the experience, skill and tools, have your dealer check your work before riding.

WARNING: If your bicycle does not fit properly, you may lose control and fall. If your new bike doesn't fit, ask your dealer to exchange it before you ride it.

fig. 2

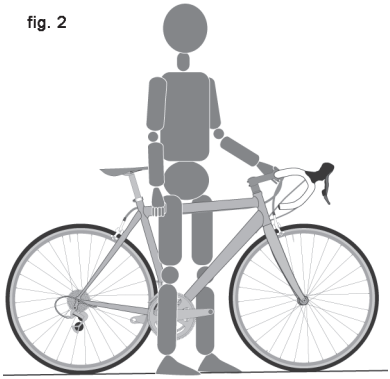

A. Standover height

1. Diamond frame bicycles

Standover height is the basic element of bike fit (see). It is the distance from the ground to the top of the bicycle's frame at that point where your crotch is when straddling the bike. To check for correct standover height, straddle the bike while wearing the kind of shoes in which you'll be riding, and bounce vigorously on your heels. If your crotch touches the frame, the bike is too big for you. Don't even ride the bike around the block. A bike which you ride only on paved surfaces and never take off-road should give you a minimum standover height clearance of two inches (5 cm). A bike that you'll ride on unpaved surfaces should give you a minimum of three inches (7.5 cm) of standover height clearance. And a bike that you'll use off road should give you four inches (10 cm) or more of clearance.

2. Step-through frame bicycles

Standover height does not apply to bicycles with step-through frames. Instead, the limiting dimension is determined by saddle height range. You must be able to adjust your saddle position as described in **B** without exceeding the limits set by the height of the top of the seat tube and the "Minimum Insertion" or "Maximum Extension" mark on the seat post.

B. Saddle position

Correct saddle adjustment is an important factor in getting the most performance and comfort from your bicycle. If the saddle position is not comfortable for you, see your dealer.

The saddle can be adjusted in three directions:

1. Up and down adjustment. To check for correct saddle height (fig. 3):

- sit on the saddle;
- place one heel on a pedal;
- rotate the crank until the pedal with your heel on it is in the down position and the crank arm is parallel to the seat tube.

If your leg is not completely straight, your saddle height needs to be adjusted. If your hips must rock for the heel to reach the pedal, the saddle is too high. If your leg is bent at the knee with your heel on the pedal, the saddle is too low.

Ask your dealer to set the saddle for

fig. 3

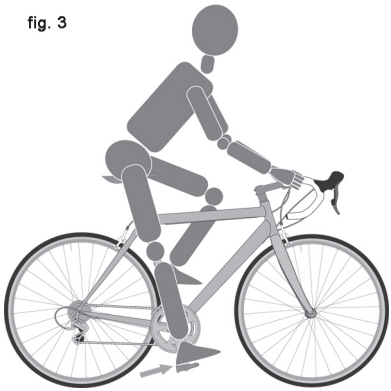

your optimal riding position and to show you how to make this adjustment. If you choose to make your own saddle height adjustment:

- loosen the seat post clamp
- raise or lower the seat post in the seat tube
- make sure the saddle is straight fore and aft
- re-tighten the seat post clamp to the recommended torque (Appendix D or the manufacturer's instructions).

Once the saddle is at the correct height, make sure that the seat post does not project from the frame beyond its "Minimum Insertion" or "Maximum Extension" mark (fig. 4).

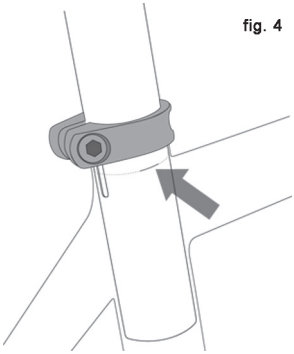
fig. 4

NOTE: Some bicycles have a sight hole in the seat tube, the purpose of which is to make it easy to see whether the seat post is inserted in the seat tube far enough to be safe. If your bicycle has such a sight hole, use it instead of the "Minimum Insertion" or "Maximum Extension" mark to make sure the seat post is inserted in the seat tube far enough to be visible through the sight hole.

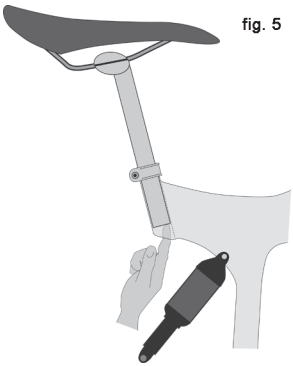
fig. 5

If your bike has an interrupted seat tube, as is the case on some suspension bikes, you must also make sure that the seat post is far enough into the frame so that you can touch it through the bottom of the interrupted seat tube with the tip of your finger without inserting your finger beyond its first knuckle. *Also see NOTE above and fig.* 5).

WARNING: If your seat post is not inserted in the seat tube as described in B.1 above, the seat post, binder or even frame may break, which could cause you to lose control and fall.

2. Front and back adjustment. The saddle can be adjusted forward or back to help you get the optimal position on the bike. Ask your dealer to set the saddle for your optimal riding position and to show you how to make this adjustment. If you choose to make your own front and back adjustment, make sure that the clamp mechanism is clamping on the straight part of the saddle rails and is not touching the curved part of the rails, and that you are using the recommended torque on the clamping fastener(s) (Appendix D or the manufacturer's instructions).

3. Saddle angle adjustment. Most people prefer a horizontal saddle; but some riders like the saddle nose angled up or down just a little. Your dealer can adjust saddle angle or teach you how to do it. If you choose to make your own saddle angle adjustment and you have a single bolt saddle clamp on your seat post, it is critical that you loosen the clamp bolt sufficiently to allow any serrations on the mechanism to disengage before changing the saddle's angle, and then that the serrations fully re-engage before you tighten the clamp bolt to the recommended torque (Appendix D or the manufacturer's instructions).

WARNING: When making saddle angle adjustments with a single bolt saddle clamp, always check to make sure that the serrations on the mating surfaces of the clamp are not worn. Worn serrations on the clamp can allow the saddle to move, causing you to lose control and fall.

Always tighten fasteners to the correct torque. Bolts that are too tight can stretch and deform. Bolts that are too loose can move and fatigue. Either mistake can lead to a sudden failure of the bolt, causing you to lose control and fall.

Note: If your bicycle is equipped with a suspension seat post, the suspension mechanism may require periodic service or maintenance. Ask your dealer for recommended service intervals for your suspension seat post.

Small changes in saddle position can have a substantial effect on performance and comfort. To find your best saddle position, make only one adjustment at a time.

WARNING: After any saddle adjustment, be sure that the saddle adjusting mechanism is properly seated and tightened before riding. A loose saddle clamp or seat post clamp can cause damage to the seat post, or can cause you to lose control and fall. A correctly tightened saddle adjusting mechanism will allow no saddle movement in any direction. Periodically check to make sure that the saddle adjusting mechanism is properly tightened.

If, in spite of carefully adjusting the saddle height, tilt and fore-and-aft position, your saddle is still uncomfortable, you may need a different saddle design. Saddles, like people, come in many different shapes, sizes and resilience. Your dealer can help you select a saddle which, when correctly adjusted for your body and riding style, will be comfortable.

WARNING: Some people have claimed that extended riding with a saddle which is incorrectly adjusted or which does not support your pelvic area correctly can cause short-term or long-term injury to nerves and blood vessels, or even impotence. If your saddle causes you pain, numbness or other discomfort, listen to your body and stop riding until you see your dealer about saddle adjustment or a different saddle.

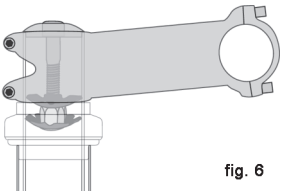

fig. 6

C. Handlebar height and angle

Your bike is equipped either with a “threadless” stem, which clamps on to the outside of the steerer tube, or with a “quill” stem, which clamps inside the steerer tube by way of an expanding binder bolt. If you aren’t absolutely sure which type of stem your bike has, ask your dealer.

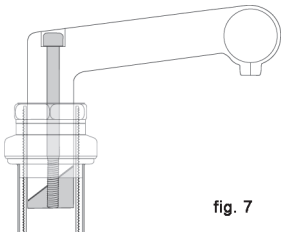

fig. 7

If your bike has a “threadless” stem (fig. 6) your dealer may be able to change handlebar height by moving height adjustment spacers from below the stem to above the stem, or vice versa. Otherwise, you’ll have to get a stem of different length or rise. Consult your dealer. Do not attempt to do this yourself, as it requires special knowledge.

If your bike has a “quill” stem (fig. 7) you can ask your dealer to adjust the handlebar height a bit by adjusting stem height.

A quill stem has an etched or stamped mark on its shaft which designates the stem’s “Minimum Insertion” or “Maximum Extension”. This mark must not be visible above the headset.

WARNING: A quill stem’s Minimum Insertion Mark must not be visible above the top of the headset. If the stem is extended beyond the Minimum Insertion Mark the stem may break or damage the fork’s steerer tube, which could cause you to lose control and fall.

WARNING: On some bicycles, changing the stem or stem height can affect the tension of the front brake cable, locking the front brake or creating excess cable slack which can make the front brake inoperable. If the front brake pads move in towards the wheel rim or out away from the wheel rim when the stem or stem height is changed, the brakes must be correctly adjusted before you ride the bicycle.

Some bicycles are equipped with an adjustable angle stem. If your bicycle has an adjustable angle stem, ask your dealer to show you how to adjust it. Do not attempt to make the adjustment yourself, as changing stem angle may also require adjustments to the bicycle’s controls.

WARNING: Always tighten fasteners to the correct torque. Bolts that are too tight can stretch and deform. Bolts that are too loose can move and fatigue. Either mistake can lead to a sudden failure of the bolt, causing you to lose control and fall.

Your dealer can also change the angle of the handlebar or bar end extensions.

WARNING: An insufficiently tightened stem clamp bolt, handlebar clamp bolt or bar end extension clamping bolt may compromise steering action, which could cause you to lose control and fall. Place the front wheel of the bicycle between your legs and attempt to twist the handlebar/stem assembly. If you can twist the stem in relation to the front wheel, turn the handlebars in relation to the stem, or turn the bar end extensions in relation to the handlebar, the bolts are insufficiently tightened.

D. Control position adjustments

The angle of the brake and shift control levers and their position on the handlebars can be changed. Ask your dealer to make the adjustments for you. If you choose to make your own control lever angle adjustment, be sure to re-tighten the clamp fasteners to the recommended torque (Appendix D or the

manufacturer's instructions).

E. Brake reach

Many bikes have brake levers which can be adjusted for reach. If you have small hands or find it difficult to squeeze the brake levers, your dealer can either adjust the reach or fit shorter reach brake levers.

WARNING: The shorter the brake lever reach, the more critical it is to have correctly adjusted brakes, so that full braking power can be applied within available brake lever travel. Brake lever travel insufficient to apply full braking power can result in loss of control, which may result in serious injury or death.

4. Tech

It's important to your safety, performance and enjoyment to understand how things work on your bicycle. We urge you to ask your dealer how to do the things described in this section before you attempt them yourself, and that you have your dealer check your work before you ride the bike. If you have even the slightest doubt as to whether you understand something in this section of the Manual, talk to your dealer. *See also Appendix A, B, C and D.*

A. Wheels

Bicycle wheels are designed to be removable for easier transportation and for repair of a tire puncture. In most cases, the wheel axles are inserted into slots, called "dropouts" in the fork and frame, but some mountain and road bikes use what is called a "through axle" wheel mounting system.

If you have a mountain or road bike equipped with through axle front or rear wheels, make sure that your dealer has given you the manufacturer's instructions, and follow those when installing or removing a through axle wheel. If you don't know what a through axle is, ask your dealer.

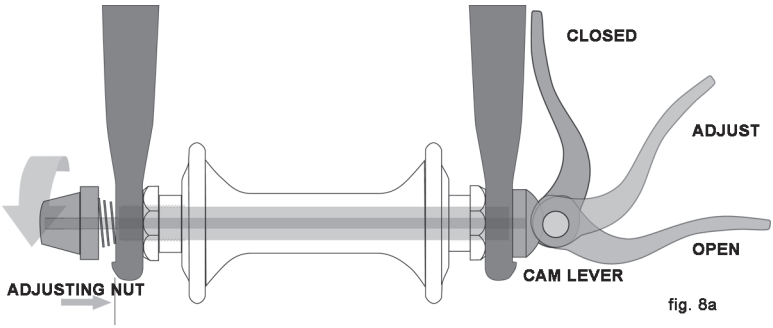

fig. 8a

If you do not have a bicycle with a through-axle wheel mounting system, it will have wheels secured in one of three ways:

• A hollow axle with a shaft (“skewer”) running through it which has an adjustable tension nut on one end and an over-center cam on the other (cam action system, fig.8 a & b)

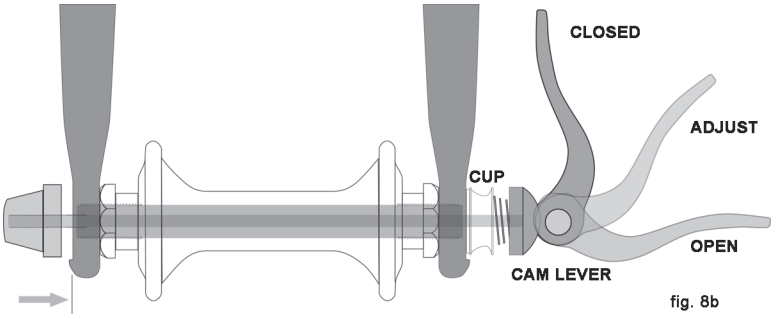

fig. 8b

• A hollow axle with a shaft (“skewer”) running through it which has a nut on one end and a fitting for a hex key, lock lever or other tightening device on the other (through bolt, fig. 9)

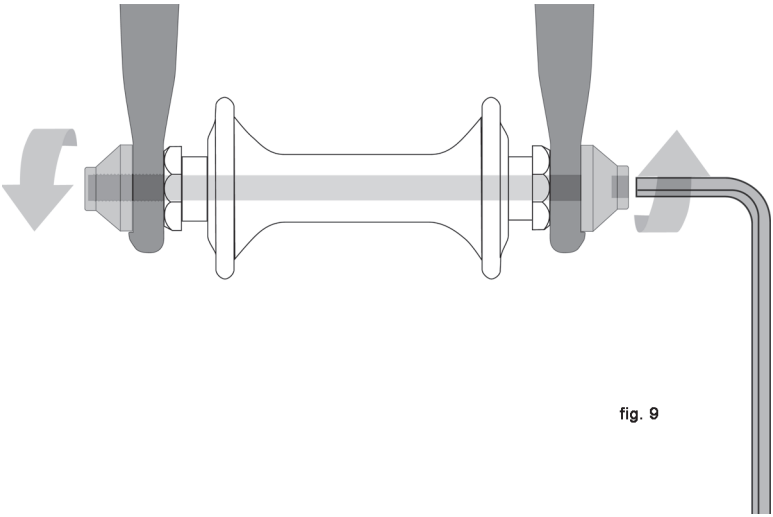
fig. 9

• Hex nuts or hex key bolts which are threaded on to or into the hub axle (bolt-on wheel, fig. 10)

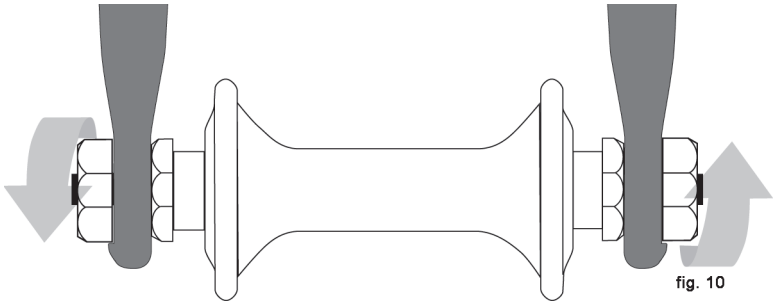
fig. 10

Your bicycle may be equipped with a different securing method for the front wheel than for the rear wheel. Discuss the wheel securing method for your bicycle with your dealer.

It is very important that you understand the type of wheel securing method on your bicycle, that you know how to secure the wheels correctly, and that you know how to apply the correct clamping force that safely secures the wheel. Ask your dealer to instruct you in correct wheel removal and installation, and ask him to give you any available manufacturer's instructions.

⚠ **WARNING: Riding with an improperly secured wheel can allow the wheel to wobble or fall off the bicycle, which can cause serious injury or death. Therefore, it is essential that you:**

1. Ask your dealer to help you make sure you know how to install and remove your wheels safely.

2. Understand and apply the correct technique for clamping your wheel in place.

3. Each time, before you ride the bike, check that the wheel is securely clamped.

The clamping action of a correctly secured wheel must emboss the surfaces of the dropouts.

1. Front Wheel Secondary Retention Devices

Most bicycles have front forks which utilize a secondary wheel retention device to reduce the risk of the wheel disengaging from the fork if the wheel is incorrectly secured. Secondary retention devices are not a substitute for correctly securing your front wheel.

Secondary retention devices fall into two basic categories:

a. The clip-on type is a part which the manufacturer adds to the front wheel hub or front fork.

b. The integral type is molded, cast or machined into the outer faces of the front fork dropouts.

Ask your dealer to explain the particular secondary retention device on your bike.

⚠ **WARNING: Do not remove or disable the secondary retention device. As its name implies, it serves as a back-up for a critical adjustment. If the wheel is not secured correctly, the secondary retention device can reduce the risk of the wheel disengaging from the fork. Removing or disabling the secondary retention device may also void the warranty.**

Secondary retention devices are not a substitute for correctly securing your wheel. Failure to properly secure the wheel can cause the wheel to wobble or disengage, which could cause you to loose control and fall, resulting in serious injury or death.

2. Wheels with cam action systems

There are currently two types of over-center cam wheel retention mechanisms: the traditional over-center cam (fig. 8a) and the cam-and-cup system (fig. 8b). Both use an over-center cam action to clamp the bike's wheel in place. Your bicycle may have a cam-and-cup front wheel retention system and a

traditional rear wheel cam action system.

a. Adjusting the traditional cam action mechanism (fig. 8a)

The wheel hub is clamped in place by the force of the over-center cam pushing against one dropout and pulling the tension adjusting nut, by way of the skewer, against the other dropout. The amount of clamping force is controlled by the tension adjusting nut. Turning the tension adjusting nut clockwise while keeping the cam lever from rotating increases clamping force; turning it counterclockwise while keeping the cam lever from rotating reduces clamping force. Less than half a turn of the tension adjusting nut can make the difference between safe clamping force and unsafe clamping force.

WARNING: The full force of the cam action is needed to clamp the wheel securely. Holding the nut with one hand and turning the lever like a wing nut with the other hand until everything is as tight as you can get it will not clamp a cam action wheel safely in the dropouts. See also the first WARNING in this Section, p. 18.

b. Adjusting the cam-and-cup mechanism (fig. 8b)

The cam-and-cup system on your front wheel will have been correctly adjusted for your bicycle by your dealer. Ask your dealer to check the adjustment every six months. **Do not use a cam-and-cup front wheel on any bicycle other than the one for which your dealer adjusted it.**

3. Removing and Installing wheels

WARNING: If your bike is equipped with a hub brake such as a rear coaster brake, front or rear drum, band or roller brake; or if it has an internal gear rear hub, do not attempt to remove the wheel. The removal and re-installation of most hub brakes and internal gear hubs requires special knowledge. Incorrect removal or assembly can result in brake or gear failure, which can cause you to lose control and fall.

CAUTION: If your bike has a disc brake, exercise care in touching the rotor or caliper. Disc rotors have sharp edges, and both rotor and caliper can get very hot during use.

a. Removing a disk brake or rim brake Front Wheel

(1) If your bike has rim brakes, disengage the brake's quick-release mechanism to increase the clearance between the tire and the brake pads (See Section 4.C fig. 11 through 15).

(2) If your bike has cam action front wheel retention, move the cam lever from the locked or CLOSED position to the OPEN position (figs. 8a & b). If your bike has through bolt or bolt-on front wheel retention, loosen the fastener(s) a few turns counter-clockwise using an appropriate wrench, lock key or the integral lever.

(3) If your front fork has a clip-on type secondary retention device, disengage it. If your front fork has an integral secondary retention device, and a traditional cam action system (fig. 8a) loosen the tension adjusting nut enough to allow removing the wheel from the dropouts. If your front wheel uses a cam-and-cup system, (fig. 8b) squeeze the cup and cam lever together while removing the

wheel. No rotation of any part is necessary with the cam-and-cup system.
You may need to tap the top of the wheel with the palm of your hand to release the wheel from the front fork.

b. Installing a disk brake or rim brake Front Wheel

CAUTION: If your bike is equipped with a front disk brake, be careful not to damage the disk, caliper or brake pads when re-inserting the disk into the caliper. Never activate a disk brake's control lever unless the disk is correctly inserted in the caliper. See also Section 4.C.

(1) If your bike has cam action front wheel retention, move the cam lever so that it curves away from the wheel (fig. 8b). This is the OPEN position. If your bike has through bolt or bolt-on front wheel retention, go to the next step.
(2) With the steering fork facing forward, insert the wheel between the fork blades so that the axle seats firmly at the top of the fork dropouts. The cam lever, if there is one, should be on rider's left side of the bicycle (fig. 8a & b). If your bike has a clip-on type secondary retention device, engage it.
(3) If you have a traditional cam action mechanism: holding the cam lever in the ADJUST position with your right hand, tighten the tension adjusting nut with your left hand until it is finger tight against the fork dropout (fig. 8a). If you have a cam-and-cup system: the nut and cup (fig. 8b) will have snapped into the recessed area of the fork dropouts and no adjustment should be required.
(4) While pushing the wheel firmly to the top of the slots in the fork dropouts, and at the same time centering the wheel rim in the fork:
(a) With a cam action system, move the cam lever upwards and swing it into the CLOSED position (fig. 8a & b). The lever should now be parallel to the fork blade and curved toward the wheel. To apply enough clamping force, you should have to wrap your fingers around the fork blade for leverage, and the lever should leave a clear imprint in the palm of your hand.
(b) With a through-bolt or bolt-on system, tighten the fasteners to the torque specifications in Appendix D or the hub manufacturer's instructions.

NOTE: If, on a traditional cam action system, the lever cannot be pushed all the way to a position parallel to the fork blade, return the lever to the OPEN position. Then turn the tension adjusting nut counterclockwise one-quarter turn and try tightening the lever again.
D (6) With a through-bolt or bolt-on system, tighten the fasteners to the torque specifications in Appendix D or the hub manufacturer's instructions.

WARNING: Securely clamping the wheel with a cam action retention device takes considerable force. If you can fully close the cam lever without wrapping your fingers around the fork blade for leverage, the lever does not leave a clear imprint in the palm of your hand, and the serrations on the wheel fastener do not emboss the surfaces of the dropouts, the tension is insufficient. Open the lever; turn the tension adjusting nut clockwise a quarter turn; then try again. See also the first WARNING in this Section, p. 18.

(6) If you disengaged the brake quick-release mechanism in 3. a. (1) above,

re-engage it to restore correct brake pad-to-rim clearance.

(7) Spin the wheel to make sure that it is centered in the frame and clears the brake pads; then squeeze the brake lever and make sure that the brakes are operating correctly.

c. Removing a disk brake or rim brake Rear Wheel

(1) If you have a multi-speed bike with a derailleur gear system: shift the rear derailleur to high gear (the smallest, outermost rear sprocket).

If you have an internal gear rear hub, consult your dealer or the hub manufacturer's instructions before attempting to remove the rear wheel.

If you have a single-speed bike with rim or disk brake, go to step (4) below.

(2) If your bike has rim brakes, disengage the brake's quick-release mechanism to increase the clearance between the wheel rim and the brake pads (see Section 4.C, figs. 11 through 15).

(3) On a derailleur gear system, pull the derailleur body back with your right hand.

(4) With a cam action mechanism, move the quick-release lever to the OPEN position (fig. 8b). With a through bolt or bolt on mechanism, loosen the fastener(s) with an appropriate wrench, lock lever or integral lever; then push the wheel forward far enough to be able to remove the chain from the rear sprocket.

(5) Lift the rear wheel off the ground a few inches and remove it from the rear dropouts.

d. Installing a disk brake or rim brake Rear Wheel

⚠ **CAUTION: If your bike is equipped with a rear disk brake, be careful not to damage the disk, caliper or brake pads when re-inserting the disk into the caliper. Never activate a disk brake's control lever unless the disk is correctly inserted in the caliper.**

(1) With a cam action system, move the cam lever to the OPEN position (see fig. 8 a & b). The lever should be on the side of the wheel opposite the derailleur and freewheel sprockets.

(2) On a derailleur bike, make sure that the rear derailleur is still in its outermost, high gear, position; then pull the derailleur body back with your right hand. Put the chain on top of the smallest freewheel sprocket.

(3) On single-speed, remove the chain from the front sprocket, so that you have plenty of slack in the chain. Put the chain on the rear wheel sprocket.

(4) Then, insert the wheel into the frame dropouts and pull it all the way in to the dropouts.

(5) On a single speed or an internal gear hub, replace the chain on the chainring; pull the wheel back in the dropouts so that it is straight in the frame and the chain has about 1/4 inches of up-and-down play.

(6) With a cam action system, move the cam lever upwards and swing it into the CLOSED position (fig. 8 a & b). The lever should now be parallel to the seat stay or chain stay and curved toward the wheel. To apply enough clamping force, you should have to wrap your fingers around the fork blade for leverage, and the lever should leave a clear imprint in the palm of your hand.

(7) With a through-bolt or bolt-on system, tighten the fasteners to the torque specifications in Appendix D or the hub manufacturer's instructions.

NOTE: If, on a traditional cam action system, the lever cannot be pushed all the way to a position parallel to the seat stay or chain stay, return the lever to the OPEN position. Then turn the tension adjusting nut counterclockwise one-quarter turn and try tightening the lever again.

WARNING: Securely clamping the wheel with a cam action retention device takes considerable force. If you can fully close the cam lever without wrapping your fingers around the seat stay or chain stay for leverage, the lever does not leave a clear imprint in the palm of your hand, and the serrations on the wheel fastener do not emboss the surfaces of the dropouts, the tension is insufficient. Open the lever; turn the tension adjusting nut clockwise a quarter turn; then try again. See also the first WARNING in this Section, p. 18.

(8) If you disengaged the brake quick-release mechanism in 3. c. (2) above, re-engage it to restore correct brake pad-to-rim clearance.

(9) Spin the wheel to make sure that it is centered in the frame and clears the brake pads; then squeeze the brake lever and make sure that the brakes are operating correctly.

B. Seat post cam action clamp

Some bikes are equipped with a cam action seat post binder. The seat post cam action binder works exactly like the traditional wheel cam action fastener (Section 4.A.2) While a cam action binder looks like a long bolt with a lever on one end and a nut on the other, the binder uses an over-center cam action to firmly clamp the seat post (see fig. 8a).

WARNING: Riding with an improperly tightened seat post can allow the saddle to turn or move and cause you to lose control and fall. Therefore:

1. Ask your dealer to help you make sure you know how to correctly clamp your seat post.

2. Understand and apply the correct technique for clamping your seat post.

3. Before you ride the bike, first check that the seat post is securely clamped.

Adjusting the seat post cam action mechanism

The action of the cam squeezes the seat collar around the seat post to hold the seat post securely in place. The amount of clamping force is controlled by the tension adjusting nut. Turning the tension adjusting nut clockwise while keeping the cam lever from rotating increases clamping force; turning it counterclockwise while keeping the cam lever from rotating reduces clamping force. Less than half a turn of the tension adjusting nut can make the difference between safe and unsafe clamping force.

WARNING: The full force of the cam action is needed to clamp the

seat post securely. Holding the nut with one hand and turning the lever like a wing nut with the other hand until everything is as tight as you can get it will not clamp the seat post safely.

WARNING: If you can fully close the cam lever without wrapping your fingers around the seat post or a frame tube for leverage, and the lever does not leave a clear imprint in the palm of your hand, the tension is insufficient. Open the lever; turn the tension adjusting nut clockwise a quarter turn; then try again.

C. Brakes

There are three general types of bicycle brakes: rim brakes, which operate by squeezing the wheel rim between two brake pads; disc brakes, which operate by squeezing a hub-mounted disc between two brake pads; and internal hub brakes. All three can be operated by way of a handlebar mounted lever. On some models of bicycle, the internal hub brake is operated by pedaling backwards. This is called a Coaster Brake and is described in Appendix C.

WARNING:

1. Riding with improperly adjusted brakes, worn brake pads, or wheels on which the rim wear mark is visible is dangerous and can result in serious injury or death.

2. Applying brakes too hard or too suddenly can lock up a wheel, which could cause you to lose control and fall. Sudden or excessive application of the front brake may pitch the rider over the handlebars, which may result in serious injury or death.

3. Some bicycle brakes, such as disc brakes (fig. 11) and linear-pull brakes (fig. 12), are extremely powerful. Take extra care in becoming familiar with these brakes and exercise particular care when using them.

4. Some bicycle brakes are equipped with a brake force modulator, a small, cylindrical device through which the brake control cable runs and which is designed to provide a more progressive application of braking force. A modulator makes the initial brake lever force more gentle, progressively increasing force until full force is achieved. If your bike is equipped with a brake force modulator, take extra care in becoming familiar with its performance characteristics.

5. Disc brakes can get extremely hot with extended use. Be careful not to touch a disc brake until it has had plenty of time to cool.

6. See the brake manufacturer's instructions for operation and care of your brakes, and for when brake pads must be replaced. If you do not have the manufacturer's instructions, see your dealer or contact the brake manufacturer.

7. If replacing worn or damaged parts, use only manufacturer-approved genuine replacement parts.

1. Brake controls and features

It's very important to your safety that you learn and remember which brake lever controls which brake on your bike. Traditionally, in the U.S. the right brake lever controls the rear brake and the left brake lever controls the front brake; but,

to check how your bike's brakes are set up, squeeze one brake lever and look to see which brake, front or rear, engages. Now do the same with the other brake lever.

Make sure that your hands can reach and squeeze the brake levers comfortably. If your hands are too small to operate the levers comfortably, consult your dealer before riding the bike. The lever reach may be adjustable; or you may need a different brake lever design.

Most rim brakes have some form of quick-release mechanism to allow the brake pads to clear the tire when a wheel is removed or reinstalled. When the brake quick release is in the open position, the brakes are inoperative. Ask your dealer to make sure that you understand the way the brake quick release works on your bike (see figs. 12, 13. 14 & 15) and check each time to make sure both brakes work correctly before you get on the bike.

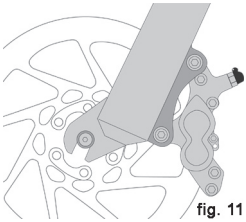
fig. 11

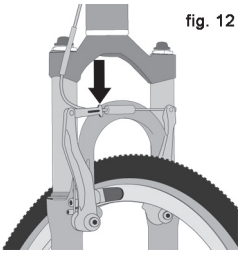
fig. 12

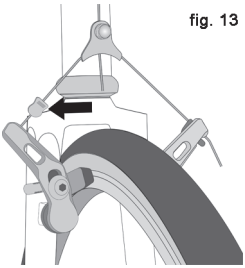
fig. 13

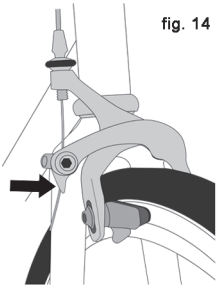
fig. 14

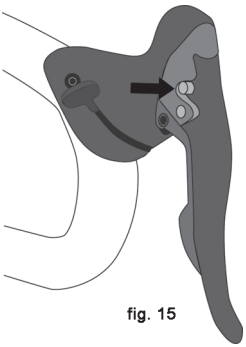
fig. 15

2. How brakes work

The braking action of a bicycle is a function of the friction between the braking surfaces. To make sure that you have maximum friction available, keep your wheel rims and brake pads or the disk rotor and caliper clean and free of dirt, lubricants, waxes or polishes.

Brakes are designed to control your speed, not just to stop the bike. Maximum braking force for each wheel occurs at the point just before the wheel "locks up" (stops rotating) and starts to skid. Once the tire skids, you actually lose most of your stopping force and all directional control. You need to practice slowing and stopping smoothly without locking up a wheel. The technique is called progressive brake modulation. Instead of jerking the brake lever to the position where you think you'll generate appropriate braking force, squeeze the lever, progressively increasing the braking force. If you feel the wheel begin to lock up, release pressure just a little to keep the wheel rotating just short of lockup. It's important to develop a feel for the amount of brake lever pressure required for each wheel at different speeds and on different surfaces. To better understand this, experiment a little by walking your bike and applying different amounts of pressure to each brake lever, until the wheel locks.

When you apply one or both brakes, the bike begins to slow, but your body wants to continue at the speed at which it was going. This causes a transfer of weight to the front wheel (or, under heavy braking, around the front wheel hub, which could send you flying over the handlebars).

A wheel with more weight on it will accept greater brake pressure before lockup; a wheel with less weight will lock up with less brake pressure. So, as you apply brakes and your weight is transferred forward, you need to shift your body toward the rear of the bike, to transfer weight back on to the rear wheel; and at the same time, you need to both decrease rear braking and increase front braking force. This is even more important on descents, because descents shift weight forward.

Two keys to effective speed control and safe stopping are controlling wheel lockup and weight transfer. This weight transfer is even more pronounced if your bike has a front suspension fork. Front suspension “dips” under braking, increasing the weight transfer (see also Section 4.F). Practice braking and weight transfer techniques where there is no traffic or other hazards and distractions.

Everything changes when you ride on loose surfaces or in wet weather. It will take longer to stop on loose surfaces or in wet weather. Tire adhesion is reduced, so the wheels have less cornering and braking traction and can lock up with less brake force. Moisture or dirt on the brake pads reduces their ability to grip. The way to maintain control on loose or wet surfaces is to go more slowly.

D. Shifting gears

Your multi-speed bicycle will have a derailleur drivetrain (see 1. below), an internal gear hub drivetrain (see 2. below) or, in some special cases, a combination of the two.

1. How a derailleur drivetrain works

If your bicycle has a derailleur drivetrain, the gear-changing mechanism will have:

- a rear cassette or freewheel sprocket cluster
- a rear derailleur
- usually a front derailleur
- one or two shifters
- one, two or three front sprockets called chainrings
- a drive chain

a. Shifting Gears

There are several different types and styles of shifting controls: levers, twist grips, triggers, combination shift/brake controls and push-buttons. Ask your dealer to explain the type of shifting controls that are on your bike, and to show you how they work.

The vocabulary of shifting can be pretty confusing. A downshift is a shift to a “lower” or “slower” gear, one which is easier to pedal. An upshift is a shift to a “higher” or “faster”, harder to pedal gear. What’s confusing is that what’s happening at the front derailleur is the opposite of what’s happening at the rear derailleur (for details, read the instructions on Shifting the Rear Derailleur and Shifting the Front Derailleur below). For example, you can select a gear which will make pedaling easier on a hill (make a downshift) in one of two ways: shift the chain down the gear “steps” to a smaller gear at the front, or up the gear “steps” to a larger gear at the rear. So, at the rear gear cluster, what is called a

downshift looks like an upshift. The way to keep things straight is to remember that shifting the chain in towards the centerline of the bike is for accelerating and climbing and is called a downshift. Moving the chain out or away from the centerline of the bike is for speed and is called an upshift.

Whether upshifting or downshifting, the bicycle derailleur system design requires that the drive chain be moving forward and be under at least some tension. A derailleur will shift only if you are pedaling forward.

CAUTION: Never move the shifter while pedaling backward, nor pedal backwards immediately after having moved the shifter. This could jam the chain and cause serious damage to the bicycle.

b. Shifting the Rear Derailleur

The rear derailleur is controlled by the right shifter.

The function of the rear derailleur is to move the drive chain from one gear sprocket to another. The smaller sprockets on the gear cluster produce higher gear ratios. Pedaling in the higher gears requires greater pedaling effort, but takes you a greater distance with each revolution of the pedal cranks. The larger sprockets produce lower gear ratios. Using them requires less pedaling effort, but takes you a shorter distance with each pedal crank revolution. Moving the chain from a smaller sprocket of the gear cluster to a larger sprocket results in a downshift. Moving the chain from a larger sprocket to a smaller sprocket results in an upshift. In order for the derailleur to move the chain from one sprocket to another, the rider must be pedaling forward.

c. Shifting the Front Derailleur:

The front derailleur, which is controlled by the left shifter, shifts the chain between the larger and smaller chainrings. Shifting the chain onto a smaller chainring makes pedaling easier (a downshift). Shifting to a larger chainring makes pedaling harder (an upshift).

d. Which gear should I be in?

The combination of largest rear and smallest front gears (fig. 16) is for the steepest hills. The smallest rear and largest front combination is for the greatest speed. It is not necessary to shift gears in sequence. Instead, find the “starting gear” which is right for your level of ability — a gear which is hard enough for quick acceleration but easy enough to let you start from a stop without wobbling — and experiment with upshifting and downshifting to get a feel for the different gear combinations. At first, practice shifting where there are no obstacles, hazards or other traffic, until you’ve built up your confidence. Learn not to use either the “smallest to smallest” or “largest to largest” gear combinations because they may cause unacceptable stress on the drive train. Learn to anticipate

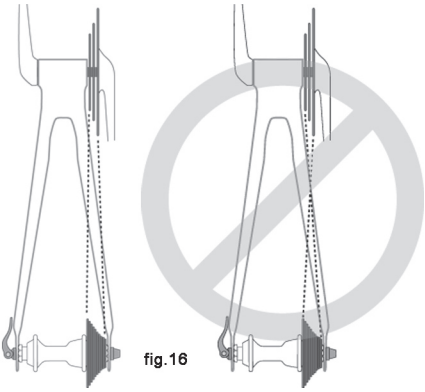

fig.16

the need to shift, and shift to a lower gear *before* the hill gets too steep. If you have difficulties with shifting, the problem could be mechanical adjustment. See your dealer for help.

WARNING: Never shift a derailleur onto the largest or the smallest sprocket if the derailleur is not shifting smoothly. The derailleur may be out of adjustment and the chain could jam, causing you to lose control and fall.

e. What if it won't shift gears?

If moving the shift control one click repeatedly fails to result in a smooth shift to the next gear chances are that the mechanism is out of adjustment. Take the bike to your dealer to have it adjusted.

2. How an internal gear hub drivetrain works

If your bicycle has an internal gear hub drivetrain, the gear changing mechanism will consist of:

- a 3, 5, 7, 8, 12 speed or possibly an infinitely variable internal gear hub
- one, or sometimes two shifters
- one or two control cables
- one front sprocket called a chainring
- a drive chain

a. Shifting internal gear hub gears

Shifting with an internal gear hub drivetrain is simply a matter of moving the shifter to the indicated position for the desired gear ratio. After you have moved the shifter to the gear position of your choice, ease the pressure on the pedals for an instant to allow the hub to complete the shift.

b. Which gear should I be in?

The numerically lowest gear (1) is for the steepest hills. The numerically largest gear is for the greatest speed.

Shifting from an easier, "slower" gear (like 1) to a harder, "faster" gear (like 2 or 3) is called an upshift. Shifting from a harder, "faster" gear to an easier, "slower" gear is called a downshift. It is not necessary to shift gears in sequence. Instead, find the "starting gear" for the conditions — a gear which is hard enough for quick acceleration but easy enough to let you start from a stop without wobbling — and experiment with upshifting and downshifting to get a feel for the different gears. At first, practice shifting where there are no obstacles, hazards or other traffic, until you've built up your confidence. Learn to anticipate the need to shift, and shift to a lower gear *before* the hill gets too steep. If you have difficulties with shifting, the problem could be mechanical adjustment. See your dealer for help.

c. What if it won't shift gears?

If moving the shift control one click repeatedly fails to result in a smooth shift to the next gear chances are that the mechanism is out of adjustment. Take the bike to your dealer to have it adjusted.

E.Pedals

1. Toe Overlap is when your toe can touch the front wheel when you turn the

handlebars to steer while a pedal is in the forwardmost position. This is common on small-framed bicycles, and is avoided by keeping the inside pedal up and the outside pedal down when making sharp turns. On any bicycle, this technique will also prevent the inside pedal from striking the ground in a turn.

⚠ **WARNING: Toe Overlap could cause you to lose control and fall. Ask your dealer to help you determine if the combination of frame size, crank arm length, pedal design and shoes you will use results in pedal overlap. Whether you have overlap or not, you must keep the inside pedal up and the outside pedal down when making sharp turns.**

2. Some bicycles come equipped with pedals that have sharp and potentially dangerous surfaces. These surfaces are designed to add safety by increasing grip between the rider's shoe and the pedal. If your bicycle has this type of high-performance pedal, you must take extra care to avoid serious injury from the pedals' sharp surfaces. Based on your riding style or skill level, you may prefer a less aggressive pedal design, or chose to ride with shin pads. Your dealer can show you a number of options and make suitable recommendations.

3. Toeclips and straps are a means to keep feet correctly positioned and engaged with the pedals. The toeclip positions the ball of the foot over the pedal spindle, which gives maximum pedaling power. The toe strap, when tightened, keeps the foot engaged throughout the rotation cycle of the pedal. While toeclips and straps give some benefit with any kind of shoe, they work most effectively with cycling shoes designed for use with toeclips. Your dealer can explain how toeclips and straps work. Shoes with deep treaded soles or welts which might make it more difficult for you to insert or remove your foot should not be used with toeclips and straps.

⚠ **WARNING: Getting into and out of pedals with toeclips and straps requires skill which can only be acquired with practice. Until it becomes a reflex action, the technique requires concentration which can distract your attention and cause you to lose control and fall. Practice the use of toeclips and straps where there are no obstacles, hazards or traffic. Keep the straps loose, and don't tighten them until your technique and confidence in getting in and out of the pedals warrants it. Never ride in traffic with your toe straps tight.**

4. Clipless pedals (sometimes called "step-in pedals") are another means to keep feet securely in the correct position for maximum pedaling efficiency. They have a plate, called a "cleat," on the sole of the shoe, which clicks into a mating spring-loaded fixture on the pedal. They only engage or disengage with a very specific motion which must be practiced until it becomes instinctive. Clipless pedals require shoes and cleats which are compatible with the make and model pedal being used.

Many clipless pedals are designed to allow the rider to adjust the amount of force needed to engage or disengage the foot. Follow the pedal manufacturer's instructions, or ask your dealer to show you how to make this adjustment. Use the easiest setting until engaging and disengaging becomes a reflex action, but always make sure that there is sufficient tension to prevent unintended release of

your foot from the pedal.

WARNING: Clipless pedals are intended for use with shoes specifically made to fit them and are designed to firmly keep the foot engaged with the pedal. Do not use shoes which do not engage the pedals correctly.

Practice is required to learn to engage and disengage the foot safely. Until engaging and disengaging the foot becomes a reflex action, the technique requires concentration which can distract your attention and cause you to lose control and fall. Practice engaging and disengaging clipless pedals in a place where there are no obstacles, hazards or traffic; and be sure to follow the pedal manufacturer's setup and service instructions. If you do not have the manufacturer's instructions, see your dealer or contact the manufacturer.

F. Bicycle Suspension

Many bicycles are equipped with suspension systems. There are many different types of suspension systems — too many to deal with individually in this Manual. If your bicycle has a suspension system of any kind, be sure to read and follow the suspension manufacturer's setup and service instructions. If you do not have the manufacturer's instructions, see your dealer or contact the manufacturer.

WARNING: Failure to maintain, check and properly adjust the suspension system may result in suspension malfunction, which may cause you to lose control and fall.

If your bike has suspension, the increased speed you may develop also increases your risk of injury. For example, when braking, the front of a suspended bike dips. You could lose control and fall if you do not have experience with this system. Learn to handle your suspension system safely. See also Section 4.C.

WARNING: Changing suspension adjustment can change the handling and braking characteristics of your bicycle. Never change suspension adjustment unless you are thoroughly familiar with the suspension system manufacturer's instructions and recommendations, and always check for changes in the handling and braking characteristics of the bicycle after a suspension adjustment by taking a careful test ride in a hazard-free area.

Suspension can increase control and comfort by allowing the wheels to better follow the terrain. This enhanced capability may allow you to ride faster; but you must not confuse the enhanced capabilities of the bicycle with your own capabilities as a rider. Increasing your skill will take time and practice. Proceed carefully until you have learned to handle the full capabilities of your bike.

WARNING: Not all bicycles can be safely retrofitted with some types of suspension systems. Before retrofitting a bicycle with any suspension, check with the bicycle's manufacturer to make sure that

what you want to do is compatible with the bicycle's design. Failing to do so can result in catastrophic frame failure.

G. Tires and Tubes

1. Tires

Bicycle tires are available in many designs and specifications, ranging from general-purpose designs to tires designed to perform best under very specific weather or terrain conditions. If, once you've gained experience with your new bike, you feel that a different tire might better suit your riding needs, your dealer can help you select the most appropriate design.

The size, pressure rating, and on some high-performance tires the specific recommended use, are marked on the sidewall of the tire (see fig. 17). The part of this information which is most important to you is Tire Pressure. But some wheel rim manufacturers also specify maximum tire pressure with a label on the rim.

WARNING: Never inflate a tire beyond the maximum pressure marked on the tire's sidewall or the wheel rim. If the maximum pressure rating for the wheel rim is lower than the maximup pressure shown on the tire, always use the lower rating. Exceeding the recommended maximum pressure may blow the tire off the rim or dmage the wheel rim, which could cause damage to the bike and injury to the rider and bystanders.

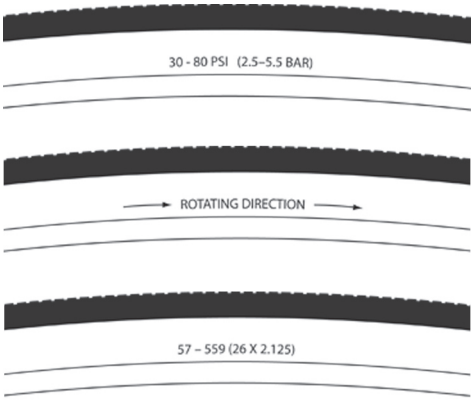

fig. 17

The best and safest way to inflate a bicycle tire to the correct pressure is with a bicycle pump which has a built-in pressure gauge.

WARNING: There is a safety risk in using gas station air hoses or other air compressors. They are not made for bicycle tires. They move a large volume of air very rapidly, and will raise the pressure in your tire very rapidly, which could cause the tube to explode.

Tire pressure is given either as maximum pressure or as a pressure range. How a tire performs under different terrain or weather conditions depends largely on tire pressure. Inflating the tire to near its maximum recommended pressure gives the lowest rolling resistance; but also produces the harshest ride. High pressures work best on smooth, dry pavement.

Very low pressures, at the bottom of the recommended pressure range, give the best performance on smooth, slick terrain such as hard-packed clay, and on deep, loose surfaces such as deep, dry sand.

Tire pressure that is too low for your weight and the riding conditions can cause a puncture of the tube by allowing the tire to deform sufficiently to pinch

the inner tube between the rim and the riding surface.

CAUTION: Pencil type automotive tire gauges can be inaccurate and should not be relied upon for consistent, accurate pressure readings. Instead, use a high quality dial gauge.

Ask your dealer to recommend the best tire pressure for the kind of riding you will most often do, and have the dealer inflate your tires to that pressure. Then, check inflation as described in Section 1.C so you'll know how correctly inflated tires should look and feel when you don't have access to a gauge. Some tires may need to be brought up to pressure every week or two, so it is important to check your tire pressures before every ride.

Some special high-performance tires have unidirectional treads: their tread pattern is designed to work better in one direction than in the other. The sidewall marking of a unidirectional tire will have an arrow showing the correct rotation direction. If your bike has unidirectional tires, be sure that they are mounted to rotate in the correct direction.

2. Tire Valves

There are primarily two kinds of bicycle tire valves: The Schraeder Valve and the Presta Valve. The bicycle pump you use must have the fitting appropriate to the valve stems on your bicycle.

The Schraeder valve (fig. 18a) is like the valve on a car tire. To inflate a Schraeder valve tire, remove the valve cap and clamp the pump fitting onto the end of the valve stem. To let air out of a Schraeder valve, depress the pin in the end of the valve stem with the end of a key or other appropriate object.

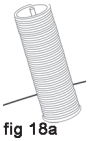
fig 18a

The Presta valve (fig. 18b) has a narrower diameter and is only found on bicycle tires. To inflate a Presta valve tire using a Presta headed bicycle pump, remove the valve cap; unscrew (counterclockwise) the valve stem lock nut; and push down on the valve stem to free it up. Then push the pump head on to the valve head, and inflate. To inflate a Presta valve with a Schraeder pump fitting, you'll need a Presta adapter (available at your bike shop) which screws on to the valve stem once you've freed up the valve. The adapter fits into the Schraeder pump fitting. Close the valve after inflation. To let air out of a Presta valve, open up the valve stem lock nut and depress the valve stem.

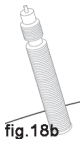
fig.18b

WARNING: We highly recommend that you carry a spare inner tube when you ride your bike, unless the bike is fitted with tubeless tires. Patching a tube is an emergency repair. If you do not apply the patch correctly or apply several patches, the tube can fail, resulting in possible tube failure, which could cause you to loose control and fall. Replace a patched tube as soon as possible.

5. Service

WARNING: Technological advances have made bicycles and bicycle components more complex, and the pace of innovation is increasing.

It is impossible for this manual to provide all the information required to properly repair and/or maintain your bicycle. In order to help minimize the chances of an accident and possible injury, it is critical that you have any repair or maintenance which is not specifically described in this manual performed by your dealer. Equally important is that your individual maintenance requirements will be determined by everything from your riding style to geographic location. Consult your dealer for help in determining your maintenance requirements.

⚠ **WARNING: Many bicycle service and repair tasks require special knowledge and tools. Do not begin any adjustments or service on your bicycle until you have learned from your dealer how to properly complete them. Improper adjustment or service may result in damage to the bicycle or in an accident which can cause serious injury or death.**

If you want to learn to do major service and repair work on your bike:

1. Ask your dealer for copies of the manufacturer's installation and service instructions for the components on your bike, or contact the component manufacturer.
2. Ask your dealer to recommend a book on bicycle repair.
3. Ask your dealer about the availability of bicycle repair courses in your area.

We recommend that you ask your dealer to check the quality of your work the first time you work on something and before you ride the bike, just to make sure that you did everything correctly. Since that will require the time of a mechanic, there may be a modest charge for this service.

We also recommend that you ask your dealer for guidance on what spare parts, such as inner tubes, light bulbs, etc. it would be appropriate for you to have once you have learned how to replace such parts when they require replacement.

A. Service Intervals

Some service and maintenance can and should be performed by the owner, and require no special tools or knowledge beyond what is presented in this manual.

The following are examples of the type of service you should perform yourself. All other service, maintenance and repair should be performed in a properly equipped facility by a qualified bicycle mechanic using the correct tools and procedures specified by the manufacturer.

1. Break-in Period: Your bike will last longer and work better if you break it in before riding it hard. Control cables and wheel spokes may stretch or "seat" when a new bike is first used and may require readjustment by your dealer. Your Mechanical Safety Check (Section 1.C) will help you identify some things that need readjustment. But even if everything seems fine to you, it's best to take your bike back to the dealer for a checkup. Dealers typically suggest you bring the bike in for a 30 day checkup. Another way to judge when it's time for the first checkup is to bring the bike in after three to five hours of hard off-road use, or about 10 to 15 hours of on-road or more casual off-road use. But if you think

something is wrong with the bike, take it to your dealer before riding it again.

2. Before every ride: Mechanical Safety Check (Section 1.C)

3. After every long or hard ride; if the bike has been exposed to water or grit; or at least every 100 miles: Clean the bike and lightly lubricate the chain's rollers with a good quality bicycle chain lubricant. Wipe off excess lubricant with a lint-free cloth. Lubrication is a function of climate. Talk to your dealer about the best lubricants and the recommended lubrication frequency for your area.

4. After every long or hard ride or after every 10 to 20 hours of riding:

• Squeeze the front brake and rock the bike forward and back. Everything feel solid? If you feel a clunk with each forward or backward movement of the bike, you probably have a loose headset. Have your dealer check it.

• Lift the front wheel off the ground and swing it from side to side. Feel smooth? If you feel any binding or roughness in the steering, you may have a tight headset. Have your dealer check it.

• Grab one pedal and rock it toward and away from the centerline of the bike; then do the same with the other pedal. Anything feel loose? If so, have your dealer check it.

• Take a look at the brake pads. Starting to look worn or not hitting the wheel rim squarely? Time to have the dealer adjust or replace them.

• Carefully check the control cables and cable housings. Any rust? Kinks? Fraying? If so, have your dealer replace them.

• Squeeze each adjoining pair of spokes on either side of each wheel between your thumb and index finger. Do they all feel about the same? If any feel loose, have your dealer check the wheel for tension and trueness.

• Check the tires for excess wear, cuts or bruises. Have your dealer replace them if necessary.

• check the wheel rims for excess wear, dings, dents and scratches. Consult your dealer if you see any rim damage.

• Check to make sure that all parts and accessories are still secure, and tighten any which are not.

• Check the frame, particularly in the area around all tube joints; the handlebars; the stem; and the seatpost for any deep scratches, cracks or discoloration. These are signs of stress-caused fatigue and indicate that a part is at the end of its useful life and needs to be replaced. See also Appendix B.

⚠ **WARNING: Like any mechanical device, a bicycle and its components are subject to wear and stress. Different materials and mechanisms wear or fatigue from stress at different rates and have different life cycles. If a component's life cycle is exceeded, the component can suddenly and catastrophically fail, causing serious injury or death to the rider. Scratches, cracks, fraying and discoloration are signs of stress-caused fatigue and indicate that a part is at the end of its useful life and needs to be replaced. While the materials and workmanship of your bicycle or of individual components may be covered by a warranty for a specified period of time by the manufacturer, this is no guarantee that the product will last the term of the warranty. Product life is often related to the kind of riding you do and to the treatment to which you submit the bicycle. The bicycle's warranty is not meant to suggest that the bicycle cannot be broken or will last forever. It only means that the bicycle is covered subject to the terms of the warranty. Please be sure to read Appendix A, Intended**

Use of your bicycle and Appendix B, The lifespan of your bike and its components, starting on page 43.

5. As required: If either brake lever fails the Mechanical Safety Check (Section 1.C), don't ride the bike. Have your dealer check the brakes.

If the chain won't shift smoothly and quietly from gear to gear, the derailleur is out of adjustment. See your dealer.

6. Every 25 (hard off-road) to 50 (on-road) hours of riding: Take your bike to your dealer for a complete checkup.

B. If your bicycle sustains an impact:

First, check yourself for injuries, and take care of them as best you can. Seek medical help if necessary.

Next, check your bike for damage.

After any crash, take your bike to your dealer for a thorough check. Carbon composite components, including fames, wheels, handlebars, stems, cranksets, brakes, etc. which have sustained an impact *must not* be ridden until they have been disassembled and thoroughly inspected by a qualified mechanic.
See also Appendix B, Lifespan of your bike and its components.

⚠ **WARNING: A crash or other impact can put extraordinary stress on bicycle components, causing them to fatigue prematurely.**

Components suffering from stress fatigue can fail suddenly and catastrophically, causing loss of control, serious injury or death.

Appendix A
Intended use of your bicycle

WARNING: Understand your bike and its intended use. Choosing the wrong bicycle for your purpose can be hazardous. Using your bike the wrong way is dangerous.

No one type of bicycle is suited for all purposes. Your retailer can help you pick the “right tool for the job” and help you understand its limitations. There are many types of bicycles and many variations within each type. There are many types of mountain, road, racing, hybrid, touring, cyclocross and tandem bicycles.

There are also bicycles that mix features. For example, there are road/racing bikes with triple cranks. These bikes have the low gearing of a touring bike, the quick handling of a racing bike, but are not well suited for carrying heavy loads on a tour. For that purpose you want a touring bike.

Within each of type of bicycle, one can optimize for certain purposes. Visit your bicycle shop and find someone with expertise in the area that interests you. Do your own homework. Seemingly small changes such as the choice of tires can improve or diminish the performance of a bicycle for a certain purpose.

On the following pages, we generally outline the intended uses of various types of bikes.

Industry usage conditions are generalized and evolving. Consult your dealer about how you intend to use your bike.

High-Performance Road

CONDITION 1

Bikes designed for riding on a paved surface where the tires do not lose ground contact.

INTENDED To be ridden on paved roads only.

NOT INTENDED For off-road, cyclocross, or touring with racks or panniers.

TRADE OFF Material use is optimized to deliver both light weight and specific performance. You must understand that (1) these types of bikes are intended to give an aggressive racer or competitive cyclist a performance advantage over a relatively short product life, (2) a less aggressive rider will enjoy longer frame life, (3) you are choosing light weight (shorter frame life) over more frame weight and a longer frame life, (4) you are choosing light weight over more dent resistant or rugged frames that weigh more. All frames that are very light need frequent inspection. These frames are likely to be damaged or broken in a crash. They are not designed to take abuse or be a rugged workhorse. *See also Appendix B.*

MAXIMUM WEIGHT LIMIT

RIDER	LUGGAGE*	TOTAL
lbs / kg	*lbs / kg*	*lbs / kg*
275 / 125	10 / 4.5	285 / 129

* Seat Bag /Handlebar Bag Only

General Purpose Riding

CONDITION 2

Bikes designed for riding Condition 1, plus smooth gravel roads and improved trails with moderate grades where the tires do not lose ground contact.

INTENDED For paved roads, gravel or dirt roads that are in good condition, and bike paths.

NOT INTENDED For off-road or mountain bike use, or for any kind of jumping. Some of these bikes have suspension features, but these features are designed to add comfort, not off-road capability. Some come with relatively wide tires that are well suited to gravel or dirt paths. Some come with relatively narrow tires that are best suited to faster riding on pavement. If you ride on gravel or dirt paths, carry heavier loads or want more tire durability talk to your dealer about wider tires.

MAXIMUM WEIGHT LIMIT

RIDER	LUGGAGE	TOTAL
lbs / kg	*lbs / kg*	*lbs / kg*
300 / 136	30 / 14	285 / 129
for Touring or Trekking		
300 / 136	55 / 25	355 / 161

Cross-Country, Marathon, Hardtails

CONDITION 3

Bikes designed for riding Conditions 1 and 2, plus rough trails, small obstacles, and smooth technical areas, including areas where momentary loss of tire contact with the ground may occur. NOT jumping. All mountain bikes without rear suspension are Condition 3, and so are some lightweight rear suspension models.

INTENDED For cross-country riding and racing which ranges from mild to aggressive over intermediate terrain (e.g., hilly with small obstacles like roots, rocks, loose surfaces and hard pack and depressions). Cross-country and marathon equipment (tires, shocks, frames, drive trains) are light-weight, favoring nimble speed over brute force. Suspension travel is relatively short since the bike is intended to move quickly on the ground.

NOT INTENDED For Hardcore Freeriding, Extreme Downhill, Dirt Jumping, Slopestyle, or very aggressive or extreme riding. No spending time in the air landing hard and hammering through obstacles.

TRADE OFF Cross-Country bikes are lighter, faster to ride uphill, and more nimble than All-Mountain bikes. Cross-Country and Marathon bikes trade off some ruggedness for pedaling efficiency and uphill speed.

MAXIMUM WEIGHT LIMIT

RIDER	LUGGAGE*	TOTAL
lbs / kg	*lbs / kg*	*lbs / kg*
300 / 136	5 /2.3	305 / 138
* Seat Bag Only		
Front suspension frames manufactured with original equipment seat stay and dropout rack mounts only		
300 / 136	55 / 25	355 / 161

All Mountain

CONDITION 4

Bikes designed for riding Conditions 1, 2, and 3, plus rough technical areas, moderately sized obstacles, and small jumps.

INTENDED For trail and uphill riding. All-Mountain bicycles are: (1) more heavy duty than cross country bikes, but less heavy duty than Freeride bikes, (2) lighter and more nimble than Freeride bikes,
(3) heavier and have more suspension travel than a cross country bike, allowing them to be ridden in more difficult terrain, over larger obstacles and moderate jumps, (4) intermediate in suspension travel and use components that fit the intermediate intended use, (5) cover a fairly wide range of intended use, and within this range are models that are more or less heavy duty. Talk to your retailer about your needs and these models.

NOT INTENDED For use in extreme forms of jumping/riding such as hardcore mountain, Freeriding, Downhill, North Shore, Dirt Jumping, Hucking etc. No large drop offs, jumps or launches (wooden structures, dirt embankments) requiring long suspension travel or heavy duty components; and no spending time in the air landing hard and hammering through obstacles.

TRADE OFF All-Mountain bikes are more rugged than cross country bikes, for riding more difficult terrain. All-Mountain bikes are heavier and harder to ride uphill than cross country bikes. All-Mountain bikes are lighter, more nimble and easier to ride uphill than Freeride bikes. All-Mountain bikes are not as rugged as Freeride bikes and must not be used for more extreme riding and terrain.

MAXIMUM WEIGHT LIMIT

RIDER	LUGGAGE*	TOTAL
lbs / kg	*lbs / kg*	*lbs / kg*
300 / 136	5 / 2.3	305 / 138

* Seat Bag Only

Gravity, Freeride, and Downhill

CONDITION 5

Bikes designed for jumping, hucking, high speeds, or aggressive riding on rougher surfaces, or landing on flat surfaces. However, this type of riding is extremely hazardous and puts unpredictable forces on a bicycle which may overload the frame, fork, or parts. If you choose to ride in Condition 5 terrain, you should take appropriate safety precautions such as more frequent bike inspections and replacement of equipment. You should also wear comprehensive safety equipment such as a full-face helmet, pads, and body armor.

INTENDED For riding that includes the most difficult terrain that only very skilled riders should attempt.

Gravity, Freeride, and Downhill are terms which describe hardcore mountain, north shore, slopestyle. This is “extreme” riding and the terms describing it are constantly evolving.

Gravity, Freeride, and Downhill bikes are: (1) heavier and have more suspension travel than All-Mountain bikes, allowing them to be ridden in more difficult terrain, over larger obstacles and larger jumps, (2) the longest in suspension travel and use components that fit heavy duty intended use. While all that is true, there is no guarantee that extreme riding will not break a Freeride bike.

The terrain and type of riding that Freeride bikes are designed for is inherently dangerous. Appropriate equipment, such as a Freeride bike, does not change this reality. In this kind of riding, bad judgment, bad luck, or riding beyond your capabilities can easily result in an accident, where you could be seriously injured, paralyzed or killed.

NOT INTENDED To be an excuse to try anything. Read Section 2. F, p. 10.

TRADE OFF Freeride bikes are more rugged than All-Mountain bikes, for riding more difficult terrain. Freeride bikes are heavier and harder to ride uphill than All-Mountain bikes.

MAXIMUM WEIGHT LIMIT

RIDER	LUGGAGE*	TOTAL
lbs / kg	*lbs / kg*	*lbs / kg*
300 / 136	5 / 2.3	305 / 138

* Seat Bag Only

Dirt Jump

CONDITION 5

Bikes designed for jumping, hucking, high speeds, or aggressive riding on rougher surfaces, or landing on flat surfaces. However, this type of riding is extremely hazardous and puts unpredictable forces on a bicycle which may overload the frame, fork, or parts. If you choose to ride in

Condition 5 terrain, you should take appropriate safety precautions such as more frequent bike inspections and replacement of equipment. You should also wear comprehensive safety equipment such as a full-face helmet, pads, and body armor.

INTENDED For man-made dirt jumps, ramps, skate parks other predictable obstacles and terrain where riders need and use skill and bike control, rather than suspension. Dirt Jumping bikes are used much like heavy duty BMX bikes. A Dirt Jumping bike does not give you skills to jump. Read Section 2. F, p. 10.

NOT INTENDED For terrain, drop offs or landings where large amounts of suspension travel are needed to help absorb the shock of landing and help maintain control.

TRADE OFF Dirt Jumping bikes are lighter and more nimble than Freeride bikes, but they have no rear suspension and the suspension travel in the front is much shorter.

MAXIMUM WEIGHT LIMIT

RIDER	LUGGAGE	TOTAL
lbs / kg	*lbs / kg*	*lbs / kg*
300 / 136	0	300 / 136

Cyclo-cross

CONDITION 2

Bikes designed for riding Condition 1, plus smooth gravel roads and improved trails with moderate grades where the tires do not lose ground contact.

INTENDED For cyclo-cross riding, training and racing. Cyclo-cross involves riding on a variety of terrain and surfaces including dirt or mud surfaces. Cyclo-cross bikes also work well for all weather rough road riding and commuting.

NOT INTENDED For off road or mountain bike use, or jumping. Cyclo-cross riders and racers dismount before reaching an obstacle, carry their bike over the obstacle and then remount. Cyclo-cross bikes are not intended for mountain bike use. The relatively large road bike size wheels are faster than the smaller mountain bike wheels, but not as strong.

MAXIMUM WEIGHT LIMIT

RIDER	LUGGAGE	TOTAL
lbs / kg	*lbs / kg*	*lbs / kg*
300 / 136	30 / 13.6	330 / 150

Road Tandems

CONDITION 1

Bikes designed for riding on a paved surface where the tires do not lose ground contact.

INTENDED Are designed to be ridden on paved roads only. They are not designed for mountain biking or off-road use.

NOT INTENDED Road tandem should not be taken off-road or used as a mountain tandem.

MAXIMUM WEIGHT LIMIT

RIDER	LUGGAGE	TOTAL
lbs / kg	*lbs / kg*	*lbs / kg*
500 / 227	75 / 34	575 / 261

Mountain Tandems

CONDITION 2

Bikes designed for riding Condition 1, plus smooth gravel roads and improved trails with moderate grades where the tires do not lose ground contact.

INTENDED The challenges of mountain biking are obvious. The added challenges of tandem riding mean that you should limit off-road tandem riding to easy-moderate terrain.

NOT INTENDED For very aggressive mountain bike riding. Mountain tandems are most definitely NOT for Downhill, Freeriding, North Shore. Choose terrain with the abilities of both the Tandem's captain and stoker in mind.

MAXIMUM WEIGHT LIMIT

RIDER	LUGGAGE	TOTAL
lbs / kg	*lbs / kg*	*lbs / kg*
500 / 227	75 / 34	575 / 261

Appendix B
The lifespan of your bike and its components

1. Nothing Lasts Forever, Including Your Bike.

When the useful life of your bike or its components is over, continued use is hazardous.

Every bicycle and its component parts have a finite, limited useful life. The length of that life will vary with the construction and materials used in the frame and components; the maintenance and care the frame and components receive over their life; and the type and amount of use to which the frame and components are subjected. Use in competitive events, trick riding, ramp riding, jumping, aggressive riding, riding on severe terrain, riding in severe climates, riding with heavy loads, commercial activities and other types of non-standard use can dramatically shorten the life of the frame and components. Any one or a combination of these conditions may result in an unpredictable failure.

All aspects of use being identical, lightweight bicycles and their components will usually have a shorter life than heavier bicycles and their components. In selecting a lightweight bicycle or components you are making a tradeoff, favoring the higher performance that comes with lighter weight over longevity. So, If you choose lightweight, high performance equipment, be sure to have it inspected frequently.

You should have your bicycle and its components checked periodically by your dealer for indicators of stress and/or potential failure, including cracks, deformation, corrosion, paint peeling, dents, and any other indicators of potential problems, inappropriate use or abuse. These are important safety checks and very important to help prevent accidents, bodily injury to the rider and shortened product life.

2. Perspective

Today's high-performance bicycles require frequent and careful inspection and service. In this Appendix we try to explain some underlying material science basics and how they relate to your bicycle. We discuss some of the trade-offs made in designing your bicycle and what you can expect from your bicycle; and we provide important, basic guidelines on how to maintain and inspect it. We cannot teach you everything you need to know to properly inspect and service your bicycle; and that is why we repeatedly urge you to take your bicycle to your dealer for professional care and attention.

WARNING: Frequent inspection of your bike is important to your safety. Follow the Mechanical Safety Check in Section 1.C of this Manual before every ride.

Periodic, more detailed inspection of your bicycle is important. How often this more detailed inspection is needed depends upon you.

You, the rider/owner, have control and knowledge of how often you use your bike, how hard you use it and where you use it. Because your dealer cannot track your use, you must take responsibility for periodically bringing your bike to your dealer for inspection and service. Your dealer will help you decide what frequency of inspection and service is

appropriate for how and where you use your bike.

For your safety, understanding and communication with your dealer, we urge you to read this Appendix in its entirety. The materials used to make your bike determine how and how frequently to inspect.

Ignoring this WARNING can lead to frame, fork or other component failure, which can result in serious injury or death.

A. Understanding metals

Steel is the traditional material for building bicycle frames. It has good characteristics, but in high performance bicycles, steel has been largely replaced by aluminum and some titanium. The main factor driving this change is interest by cycling enthusiasts in lighter bicycles.

Properties of Metals

Please understand that there is no simple statement that can be made that characterizes the use of different metals for bicycles. What is true is how the metal chosen is applied is much more important than the material alone. One must look at the way the bike is designed, tested, manufactured, supported along with the characteristics of the metal rather than seeking a simplistic answer.

Metals vary widely in their resistance to corrosion. Steel must be protected or rust will attack it. Aluminum and Titanium quickly develop an oxide film that protects the metal from further corrosion. Both are therefore quite resistant to corrosion. Aluminum is not perfectly corrosion resistant, and particular care must be used where it contacts other metals and galvanic corrosion can occur.

Metals are comparatively ductile. Ductile means bending, buckling and stretching before breaking. Generally speaking, of the common bicycle frame building materials steel is the most ductile, titanium less ductile, followed by aluminum.

Metals vary in density. Density is weight per unit of material. Steel weighs 7.8 grams/cm3 (grams per cubic centimeter), titanium 4.5 grams/cm3, aluminum 2.75 grams/cm3. Contrast these numbers with carbon fiber composite at 1.45 grams/cm3.

Metals are subject to fatigue. With enough cycles of use, at high enough loads, metals will eventually develop cracks that lead to failure. It is very important that you read The basics of metal fatigue below.

Let's say you hit a curb, ditch, rock, car, another cyclist or other object. At any speed above a fast walk, your body will continue to move forward, momentum carrying you over the front of the bike. You cannot and will not stay on the bike, and what happens to the frame, fork and other components is irrelevant to what happens to your body.

What should you expect from your metal frame? It depends on many complex factors, which is why we tell you that crashworthiness cannot be a design criteria. With that important note, we can tell you that if the impact is hard enough the fork or frame may be bent or buckled. On a steel bike, the steel fork may be severely bent and the frame undamaged. Aluminum is less ductile than steel, but you can expect the fork and frame to be bent or buckled. Hit harder and the top tube may be broken in tension and the down tube buckled. Hit harder and the top tube may be broken, the down tube buckled and broken, leaving the head tube and fork separated from the main triangle.

When a metal bike crashes, you will usually see some evidence of this ductility

in bent, buckled or folded metal.

It is now common for the main frame to be made of metal and the fork of carbon fiber. *See Section B, Understanding composites* below. The relative ductility of metals and the lack of ductility of carbon fiber means that in a crash scenario you can expect some bending or bucking in the metal but none in the carbon. Below some load the carbon fork may be intact even though the frame is damaged. Above some load the carbon fork will be completely broken.

The basics of metal fatigue

Common sense tells us that nothing that is used lasts forever. The more you use something, and the harder you use it, and the worse the conditions you use it in, the shorter its life.

Fatigue is the term used to describe accumulated damage to a part caused by repeated loading. To cause fatigue damage, the load the part receives must be great enough. A crude, often-used example is bending a paper clip back and forth (repeated loading) until it breaks. This simple definition will help you understand that fatigue has nothing to do with time or age. A bicycle in a garage does not fatigue. Fatigue happens only through use.

So what kind of “damage” are we talking about? On a microscopic level, a crack forms in a highly stressed area. As the load is repeatedly applied, the crack grows. At some point the crack becomes visible to the naked eye. Eventually it becomes so large that the part is too weak to carry the load that it could carry without the crack. At that point there can be a complete and immediate failure of the part.

One can design a part that is so strong that fatigue life is nearly infinite. This requires a lot of material and a lot of weight. Any structure that must be light and strong will have a finite fatigue life. Aircraft, race cars, motorcycles all have parts with finite fatigue lives. If you wanted a bicycle with an infinite fatigue life, it would weigh far more than any bicycle sold today. So we all make a tradeoff: the wonderful, lightweight performance we want requires that we inspect the structure.

What to look for

• ONCE A CRACKS STARTS IT CAN GROW AND GROW FAST. Think about the crack as forming a pathway to failure. This means that any crack is potentially dangerous and will only become more dangerous.	SIMPLE RULE 1 : If you find crack, replace the part.
• CORROSSION SPEEDS DAMAGE. Cracks grow more quickly when they are in a corrosive environment. Think about the corrosive solution as further weakening and extending the crack.	SIMPLE RULE 2 : Clean your bike, lubricate your bike, protect your bike from salt, remove any salt as soon as you can.
• STAINS AND DISCOLORATION CAN OCCUR NEAR A CRACK. Such staining may be a warning sign that a crack exists.	SIMPLE RULE 3 : Inspect and investigate any staining to see if it is associated with a crack.

• SIGNIFICANT SCRATCHES, GOUGES, DENTS OR SCORING CREATE STARTING POINTS FOR CRACKS. Think about the cut surface as a focal point for stress (in fact engineers call such areas “stress risers,” areas where the stress is increased). Perhaps you have seen glass cut? Recall how the glass was scored and then broke on the scored line.	SIMPLE RULE 4 : Do not scratch, gouge or score any surface. If you do, pay frequent attention to this area or replace the part.
• SOME CRACKS (particularly larger ones) MAY MAKE CREAKING NOISE AS YOU RIDE. Think about such a noise as a serious warning signal. Note that a well-maintained bicycle will be very quiet and free of creaks and squeaks.	SIMPLE RULE 5 : Investigate and find the source of any noise. It may not a be a crack, but whatever is causing the noise should be fixed promptly.

In most cases a fatigue crack is not a defect. It is a sign that the part has been worn out, a sign the part has reached the end of its useful life. When your car tires wear down to the point that the tread bars are contacting the road, those tires are not defective. Those tires are worn out and the tread bar says “time for replacement.” When a metal part shows a fatigue crack, it is worn out. The crack says “time for replacement.”

Fatigue Is Not A Perfectly Predictable Science

Fatigue is not a perfectly predictable science, but here are some general factors to help you and your dealer determine how often your bicycle should be inspected. The more you fit the “shorten product life” profile, the more frequent your need to inspect. The more you fit the “lengthen product life” profile, the less frequent your need to inspect.

Factors that shorten product life:

- ***Hard, harsh riding style***
- ***“Hits”, crashes, jumps, other “shots” to the bike***
- ***High mileage***
- ***Higher body weight***
- ***Stronger, more fit, more aggressive rider***
- ***Corrosive environment (wet, salt air, winter road salt, accumulated sweat)***
- ***Presence of abrasive mud, dirt, sand, soil in riding environment***

Factors that lengthen product life:

- ***Smooth, fluid riding style***
- ***No “hits”, crashes, jumps, other “shots” to the bike***
- ***Low mileage***
- ***Lower body weight***
- ***Less aggressive rider***
- ***Non-corrosive environment (dry, salt-free air)***
- ***Clean riding environment***

WARNING: Do not ride a bicycle or component with any crack, bulge or dent, even a small one. Riding a cracked frame, fork or component could lead to complete failure, with risk of serious injury or death.

B. Understanding composites

All riders must understand a fundamental reality of composites. Composite materials constructed of carbon fibers are strong and light, but when crashed or overloaded, carbon fibers do not bend, they break.

What Are Composites?

The term “composites” refers to the fact that a part or parts are made up of different components or materials. You’ve heard the term “carbon fiber bike.” This really means “composite bike.”

Carbon fiber composites are typically a strong, light fiber in a matrix of plastic, molded to form a shape. Carbon composites are light relative to metals. Steel weighs 7.8 grams/cm^3 (grams per cubic centimeter), titanium 4.5 grams/cm^3, aluminum 2.75 grams/cm^3. Contrast these numbers with carbon fiber composite at 1.45 grams/cm^3.

The composites with the best strength-to-weight ratios are made of carbon fiber in a matrix of epoxy plastic. The epoxy matrix bonds the carbon fibers together, transfers load to other fibers, and provides a smooth outer surface. The carbon fibers are the “skeleton” that carries the load.

Why Are Composites Used?

Unlike metals, which have uniform properties in all directions (engineers call this isotropic), carbon fibers can be placed in specific orientations to optimize the structure for particular loads. The choice of where to place the carbon fibers gives engineers a powerful tool to create strong, light bicycles. Engineers may also orient fibers to suit other goals such as comfort and vibration damping.

Carbon fiber composites are very corrosion resistant, much more so than most metals.

Think about carbon fiber or fiberglass boats.

Carbon fiber materials have a very high strength-to-weight ratio.

What Are The Limits Of Composites?

Well designed “composite” or carbon fiber bicycles and components have long fatigue lives, usually better than their metal equivalents.

While fatigue life is an advantage of carbon fiber, you must still regularly inspect your carbon fiber frame, fork, or components.

Carbon fiber composites are not ductile. Once a carbon structure is overloaded, it will not bend; it will break. At and near the break, there will be rough, sharp edges and maybe delamination of carbon fiber or carbon fiber fabric layers. There will be no bending, buckling, or stretching.

If You Hit Something Or Have A Crash, What Can You Expect From Your Carbon Fiber Bike?

Let’s say you hit a curb, ditch, rock, car, other cyclist or other object. At any speed above a fast walk, your body will continue to move forward, the momentum carrying you over the front of the bike. You cannot and will not

stay on the bike and what happens to the frame, fork and other components is irrelevant to what happens to your body.

What should you expect from your carbon frame? It depends on many complex factors. But we can tell you that if the impact is hard enough, the fork or frame may be completely broken. Note the significant difference in behavior between carbon and metal. *See Section 2. A, Understanding metals* in this Appendix. Even if the carbon frame was twice as strong as a metal frame, once the carbon frame is overloaded it will not bend, it will break completely.

Inspection of Composite Frame, Fork, and Components

Cracks:

Inspect for cracks, broken, or splintered areas. Any crack is serious. Do not ride any bicycle or component that has a crack of any size. ***Delamination:***

Delamination is serious damage. Composites are made from layers of fabric. Delamination means that the layers of fabric are no longer bonded together. Do not ride any bicycle or component that has any delamination. These are some delamination clues:

1. • A cloudy or white area. This kind of area looks different from the ordinary undamaged areas. Undamaged areas will look glassy, shiny, or “deep,” as if one was looking into a clear liquid. Delaminated areas will look opaque and cloudy.
2. • Bulging or deformed shape. If delamination occurs, the surface shape may change. The surface may have a bump, a bulge, soft spot, or not be smooth and fair.
3. • A difference in sound when tapping the surface. If you gently tap the surface of an undamaged composite you will hear a consistent sound, usually a hard, sharp sound. If you then tap a delaminated area, you will hear a different sound, usually duller, less sharp.

Unusual Noises:

Either a crack or delamination can cause creaking noises while riding. Think about such a noise as a serious warning signal. A well maintained bicycle will be very quiet and free of creaks and squeaks. Investigate and find the source of any noise. It may not be a crack or delamination, but whatever is causing the noise must be fixed or replaced before riding.

⚠ **WARNING: Do not ride a bicycle or component with any delamination or crack. Riding a delaminated or cracked frame, fork or other component could lead to complete failure, with risk of serious injury or death.**

C. Understanding components

It is often necessary to remove and disassemble components in order to properly and carefully inspect them. This is a job for a professional bicycle mechanic with the special tools, skills and experience to inspect and service today’s high-tech high-performance bicycles and their components.

Aftermarket “Super Light” components

Think carefully about your rider profile as outlined above. The more you fit the “shorten product life” profile, the more you must question the use of super light components. The more you fit the “lengthen product life” profile, the more

likely it is that lighter components may be suitable for you. Discuss your needs and your profile very honestly with your dealer.
Take these choices seriously and understand that you are responsible for the changes.

A useful slogan to discuss with your dealer if you contemplate changing components is “Strong, Light, Cheap –pick two.”

Original Equipment components

Bicycle and component manufacturers tests the fatigue life of the components that are original equipment on your bike. This means that they have met test criteria and have reasonable fatigue life. It does not mean that the original components will last forever. They won’t.

Appendix C
Coaster Brake

1. How the coaster brake works

The coaster brake is a sealed mechanism which is a part of the bicycle's rear wheel hub. The brake is activated by reversing the rotation of the pedal cranks (see fig. 5). Start with the pedal cranks in a nearly horizontal position, with the front pedal in about the 4 o'clock position, and apply downward foot pressure on the pedal that is to the rear. About 1/8 turn rotation will activate the brake. The more downward pressure you apply, the more braking force, up to the point where the rear wheel stops rotating and begins to skid.

WARNING: Before riding, make sure that the brake is working properly. If it is not working properly, have the bicycle checked by your dealer before you ride it.

WARNING: If your bike has only a coaster brake, ride conservatively. A single rear brake does not have the stopping power of front-and-rear brake systems.

2. Adjusting your coaster brake

Coaster brake service and adjustment requires special tools and special knowledge. Do not attempt to disassemble or service your coaster brake. Take the bicycle to your dealer for coaster brake service.

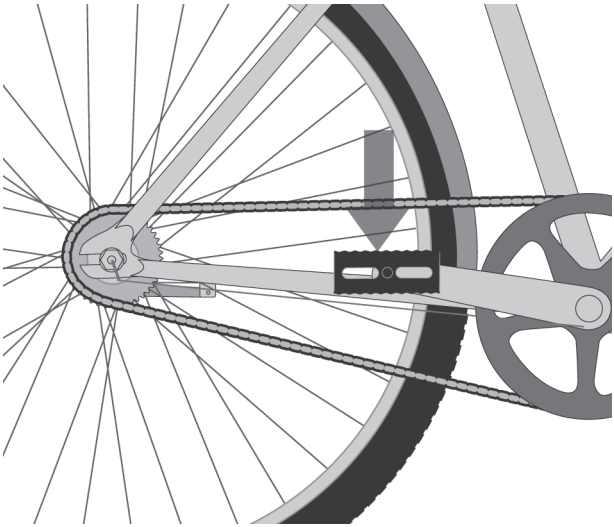

Appendix D
Fastener Torque Specifications

Correct tightening torque of threaded fasteners is very important to your safety. Always tighten fasteners to the correct torque. In case of a conflict between the instructions in this manual and information provided by a component manufacturer, consult with your dealer or the manufacturer's customer service representative for clarification. Bolts that are too tight can stretch and deform. Bolts that are too loose can move and fatigue. Either mistake can lead to a sudden failure of the bolt.

Always use a correctly calibrated torque wrench to tighten critical fasteners on your bike. Carefully follow the torque wrench manufacturer's instructions on the correct way to set and use the torque wrench for accurate results.

FASTENER RECOMMENDED TORQUE

WHEELS
PEDALS
SEAT POST CLAMP
SADDLE CLAMP
STEERER CLAMP
HANDLEBAR CLAMP
CONTROL LEVER CLAMPS